ZTE BLADE™ A7 PRIME

User Guide

About This Guide

Thank you for choosing this ZTE mobile device. In order to keep your device in its best condition, please read this manual and keep it for future reference.

Copyright

Copyright © 2019 ZTE CORPORATION

All rights reserved.

No part of this publication may be quoted, reproduced, translated or used in any form or by any means, electronic or mechanical, including photocopying and microfilm, without the prior written permission of ZTE Corporation.

Notice

ZTE Corporation reserves the right to make modifications on print errors or update specifications in this manual without prior notice. This manual has been designed with the utmost care to ensure the accuracy of its content. However, all statements, information and recommendations contained therein do not constitute a warranty of any kind, either expressed or implied. We offer self-service for our smart terminal device users. Please visit the ZTE official website (at www.zteusa.com) for more information on self-service and supported product models. Information on the website takes precedence.

Disclaimer

ZTE Corporation expressly disclaims any liability for faults and damages caused by unauthorized modifications of the software.

Images and screenshots used in this manual may differ from the actual product. Content in this manual may differ from the actual product or software.

Trademarks

ZTE, BLADE, and the ZTE logos are trademarks of ZTE Corporation.

LTE is a trademark of ETSI.

Android™ is a trademark of Google LLC.

The *Bluetooth*® word mark and logos are registered trademarks owned by the Bluetooth SIG, Inc. and any use of such marks by ZTE Corporation is under license.

microSDXC Logo is a trademark of SD-3C, LLC.

For DTS patents, see http://patents.dts.com. Manufactured under license from DTS Licensing Limited. DTS, the Symbol, & DTS and the Symbol together are registered trademarks or trademarks of DTS, Inc. in the United States and/or other countries. ©DTS, Inc. All Rights Reserved.

Other trademarks and trade names are those of their respective owners.

Version No.: R1.0

Edition Time: August 30, 2019

Contents

Getting Started 10

Getting to Know Your Phone 10
Key Functions 12
Installing a nano-SIM Card and an Optional microSDXC Card ... 13
Charging the Battery 15
Powering Your Phone On/Off 17
Setting Up Your Phone for the First Time 17
Locking/Unlocking the Screen and Keys 17
Getting to Know the Home Screen 19

Personalizing 21

Changing the System Language 21
Setting the Date and Time 21
Changing the Ringtone, Notification Sound, and Alarm Sound 22
Turning System Sounds On/Off 23
Adjusting Volumes 23
Switching to Silent or Vibration Mode 23
Using Do Not Disturb Mode 24
Applying New Wallpapers 25
Setting the Theme 26
Setting the Home Screen Transition Effect 26
Changing the Screen Brightness 26
Protecting Your Phone With Screen Locks 27
Protecting Your Phone With Screen Pinning 28

Using Your Fingerprint....29

Knowing the Basics....31

Monitoring the Phone Status....31
Managing Notifications....32
Managing Shortcuts and Widgets....35
Organizing With Folders....36
Rearranging the Primary Shortcuts....37
Editing Text....37
Opening and Switching Apps....38
Using Two Apps in Split-Screen Mode....39
Uninstalling or Disabling an Application....40

Connecting to Networks and Devices....41

Connecting to Mobile Networks....41
Connecting to Wi-Fi....42
Connecting to *Bluetooth* Devices....44
Connecting to Your Computer via USB....46
Using the microSDXC Card as Portable or Device Storage....47
Sharing Mobile Data Through Tethering....51

Phone Calls....52

Placing and Ending Voice Calls....52
Answering or Rejecting Voice Calls....53
Using Real-Time Text (RTT)....54
Working With the Call History....56
Calling Your Contacts....58

Checking Voicemail 58
Using Options During a Call 59
Managing Multi-party Calls 60
Adjusting Your Call Settings 62

Contacts 67
Checking Contact Details 67
Adding a New Contact 67
Importing, Exporting, and Sharing Contacts 68
Working With Favorite Contacts 69
Managing Contacts With Labels 70
Searching for a Contact 71
Editing Contacts 72

Web Accounts 74
Adding or Removing Accounts 74
Configuring Account Sync 75

Email 77
Setting Up the First Email Account 77
Checking Your Emails 77
Responding to an Email 78
Writing and Sending an Email 79
Adding and Editing Email Accounts 80
Changing General Email Settings 81

Messages 82
Opening the Messages Screen 82

Sending a Message 82
Replying to a Message 83
Forwarding a Message 84
Deleting Messages or Conversations 84

Web Browser 85
Opening the Browser 85
Using Multiple Browser Tabs 86
Downloading Files 86

Camera 87
Capturing a Photo 87
Using Manual Camera Mode 90
Recording a Video 91
Customizing Camera and Video Settings 92

Music 95
Viewing Your Music Library 95
Setting a Song as the Default Ringtone 96
Playing Music 97
Managing Playlists 99

Video Player 100
Opening the Video Library 100
Playing and Controlling Videos 100
Managing Video Files 101

Voice Recorder 103

Recording a Voice Memo....103
Playing a Voice Memo....103
Trimming a Voice Memo....104

More Apps 105

Calculator....105
Clock....105
Downloads....107
File Manager....107
Google Apps....108

Settings 110

Network & Internet....110
Connected Devices....113
Apps & Notifications....113
Features....115
Battery....115
Display....116
Sound....116
Storage....116
Security & Location....117
Accounts....119
Accessibility....120
Digital Wellbeing....120
Google....120
System....121
System Updates....122

Upgrading the Phone Software.....123

Troubleshooting 124

For Your Safety 129

General Safety 129
Radio Frequency (RF) Energy 131
FCC Regulations..... 132
Hearing Aid Compatibility (HAC) Regulations for Mobile Phones
..... 134
CTIA Requirements 136
Distractions..... 137
Product Handling 137
Electrical Safety..... 143
Radio Frequency Interference 144
Explosive Environments..... 145

Getting Started

Getting to Know Your Phone

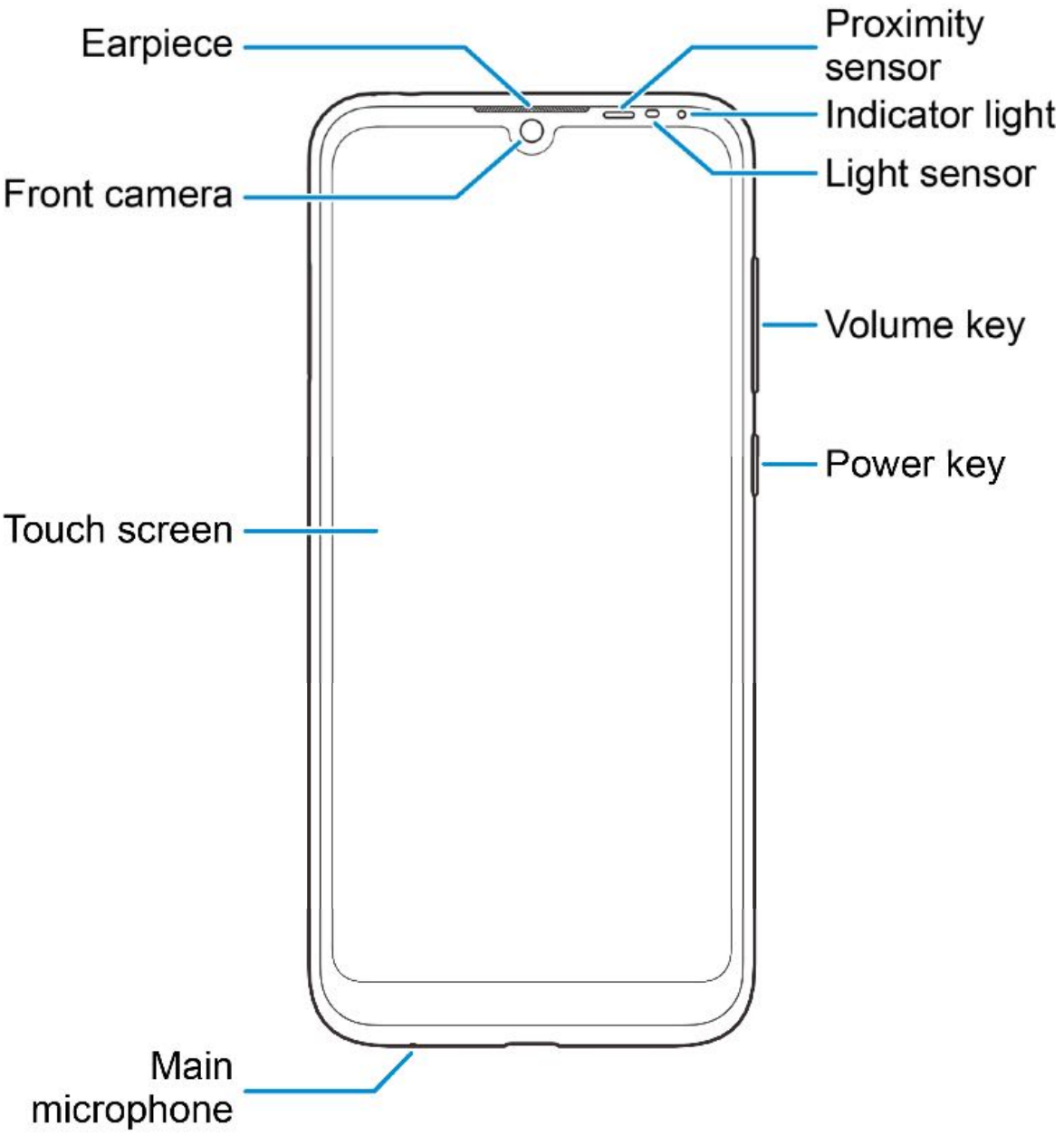

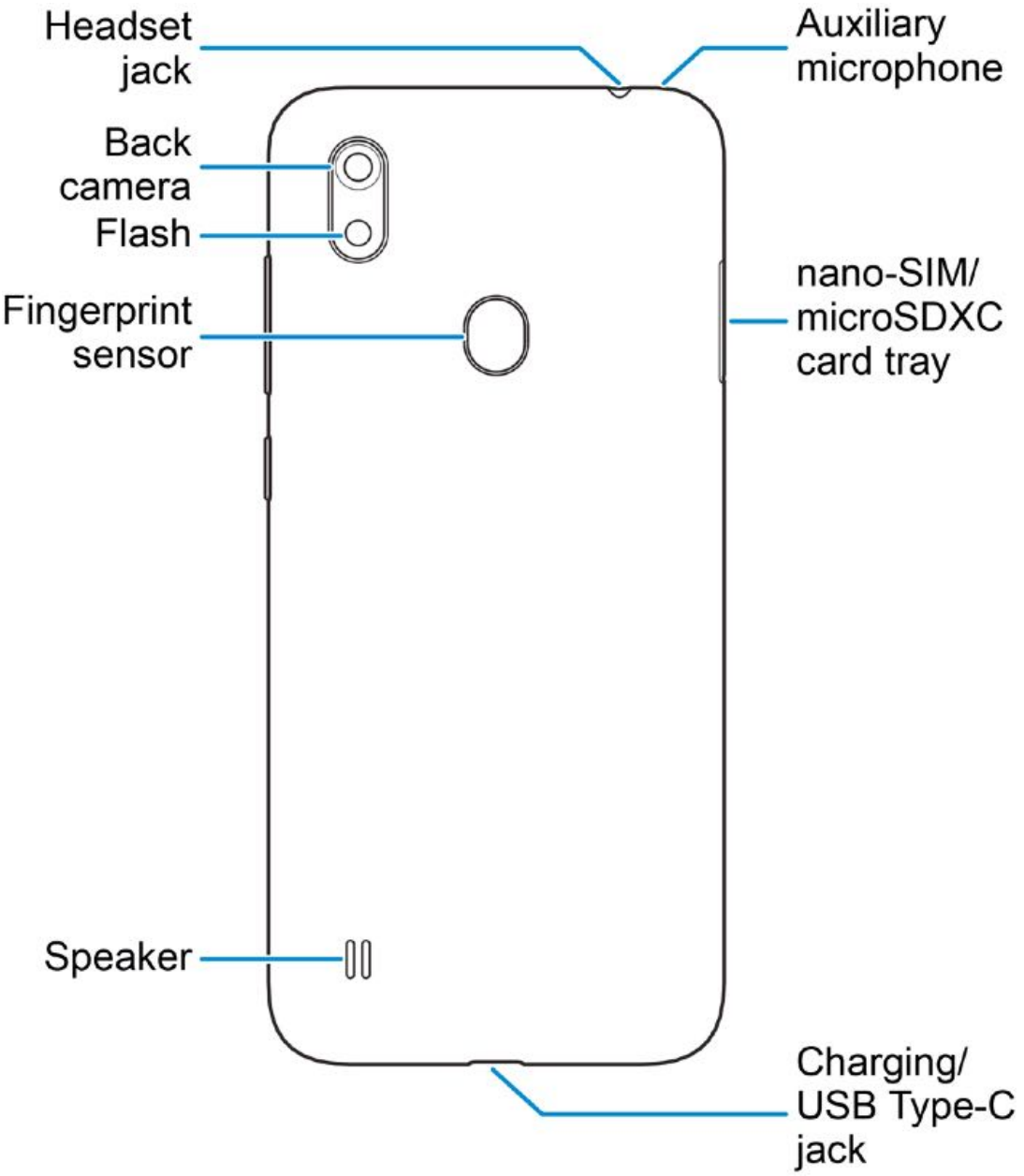
Headset jack
Auxiliary microphone
Back camera
Flash
Fingerprint sensor
nano-SIM/ microSDXC card tray
Speaker
Charging/ USB Type-C jack

Key Functions

Key	Function
Power key	• Press and hold to turn airplane mode on or off, restart, or power off. • Press to switch your phone to sleep mode or wake up your phone.
Volume key	Press or hold either end of the key to turn the volume up or down.
(Home key)	• Touch to return to the home screen from any application or screen. • Touch and hold to use the Google Assistant.
(Recent apps key)	• Touch to see recently used applications. • Touch twice to switch between the two most recent applications.
(Back key)	Touch to go to the previous screen.

NOTE:

You can replace the **Home** key, the **Recent apps** key, and the **Back** key with other navigation styles. Swipe up on the home screen and touch **Settings** > **Features** > **Navigation keys** to select other navigation bar styles, see tutorials, and personalize settings.

Installing a nano-SIM Card and an Optional microSDXC Card

The nano-SIM card can be installed or removed while the phone is turned on.

WARNING!

To avoid damage to the phone, do not use any other kind of SIM cards, or any non-standard nano-SIM card cut from a SIM card. You can get a standard nano-SIM card from your service provider.

1. Insert the tip of the tray eject tool into the hole on the card tray.

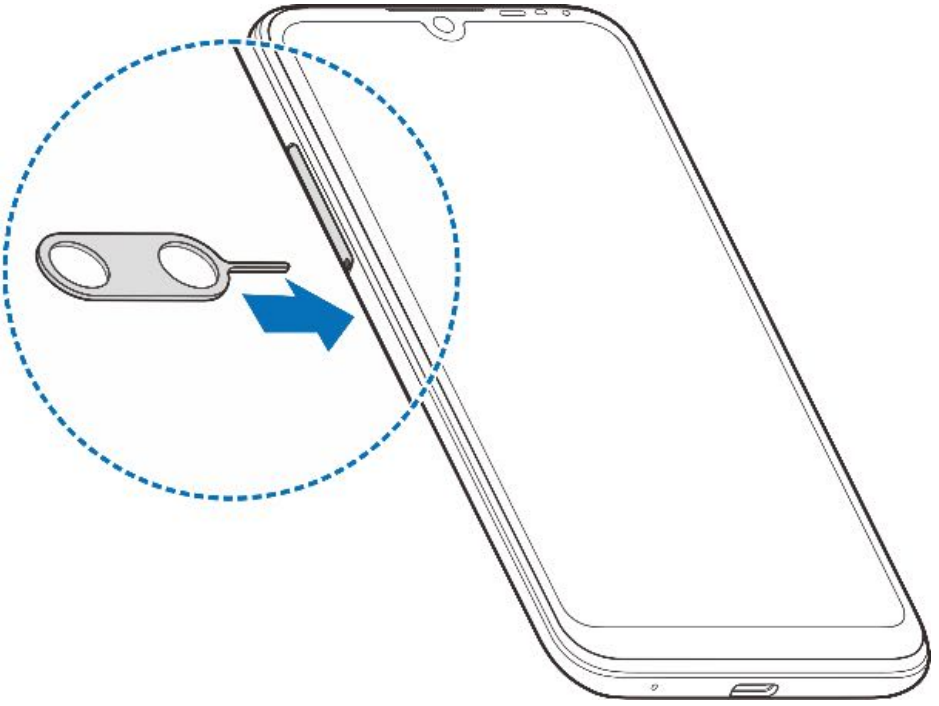

2. Pull out the card tray and place the nano-SIM card and the microSDXC card (optional) on the tray, as shown. Carefully slide the tray back into place.

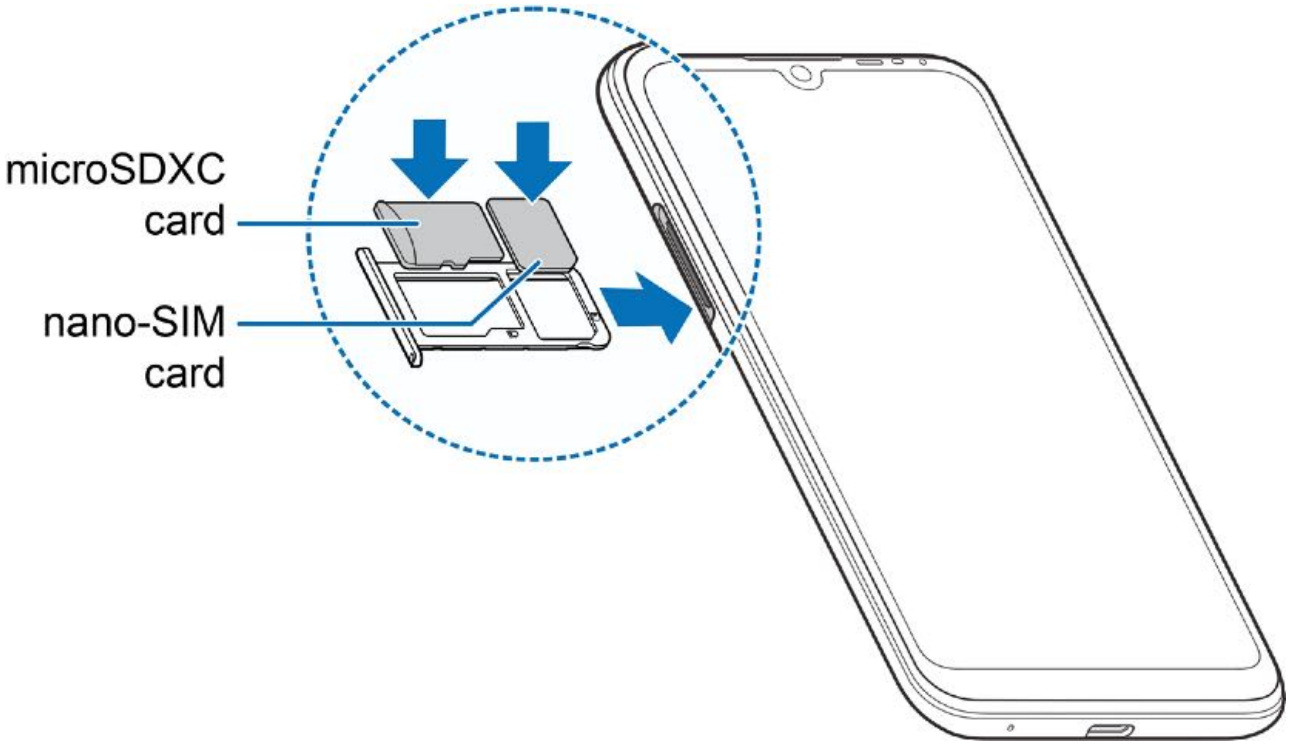

NOTE:

Some applications may require a microSDXC card to work normally and/or may store data on the card. Therefore, it is recommended that you keep a microSDXC card installed and not remove or replace it randomly.

Charging the Battery

Your phone's battery should have enough power for the phone to turn on, find a signal, and make a few calls. You should fully charge the battery as soon as possible.

WARNING!

Use only ZTE-approved chargers and USB Type-C cables. The use of unapproved accessories could damage your phone or cause the battery to explode.

WARNING!

Do not remove the back cover. The battery is not removable. Removal may cause fire or explosion.

1. Connect the adapter to the charging jack.

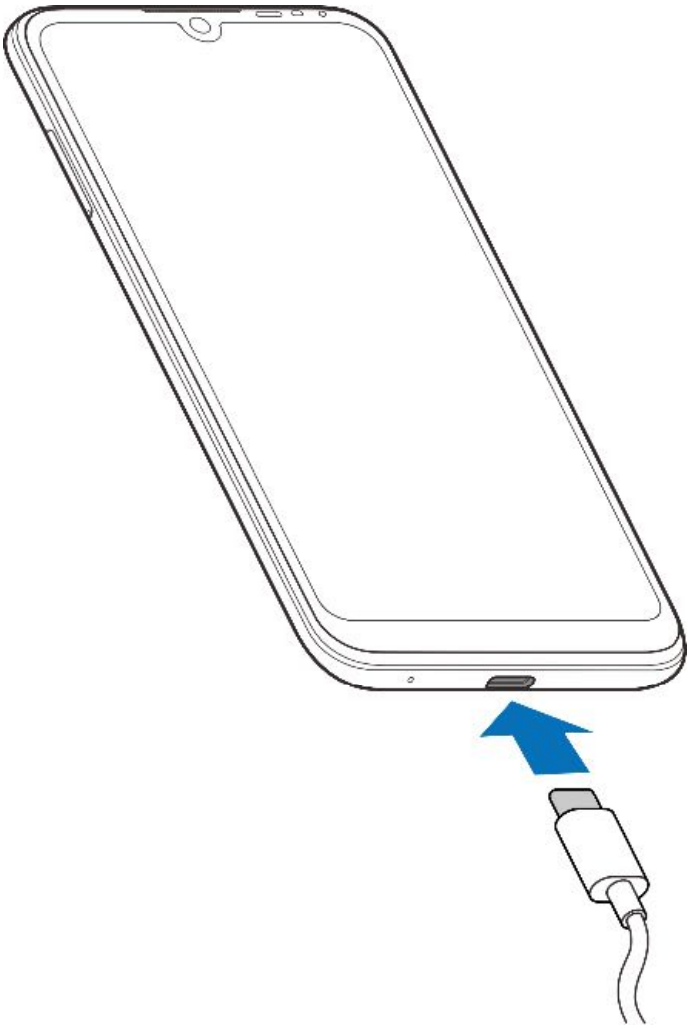

2. Connect the charger to a standard AC power outlet. If the phone is on, you'll see a charging icon, such as or , appear in the status bar.
3. Disconnect the charger when the battery is fully charged.

NOTE:

If the battery is extremely low, you may be unable to power on the phone even when it is being charged. In this case, try again after charging the phone for at least 20 minutes. Contact customer service if you still cannot power on the phone after prolonged charging.

Powering Your Phone On/Off

- Press and hold the **Power** key to turn on your phone.
- To turn it off, press and hold the **Power** key to open the options menu and touch ⏻ > ⏻.

NOTE:

If the screen freezes or takes too long to respond, try pressing and holding the **Power** key for about 10 seconds to restart the phone.

Setting Up Your Phone for the First Time

When you first power on your phone after you purchase it or reset it to factory settings (see *Reset Options*)), you will need to set it up before using it. Select the language and then follow the prompts to set up your phone.

Locking/Unlocking the Screen and Keys

Your phone allows you to quickly lock the screen and keys (put the phone to Sleep mode) when not in use and also to turn the screen back on and unlock it when you need it.

Lock the Screen and Keys

To quickly turn the screen off and lock the keys, press the **Power** key.

NOTE:

To save battery power, the phone automatically turns off the screen after a certain period of time when you leave it idle. You will still be able to receive messages and calls while the phone screen is off.

Unlock the Screen and Keys

1. Press the **Power** key to turn the screen on.
2. Swipe up on the screen.

   - or -

   Swipe away from at the bottom right of the screen to open the Camera app.

   - or -

   Swipe away from at the bottom left to use the Google Assistant.

   - or -

   Double-tap a notification to open the related app.

NOTE:

If you have set an unlock pattern, a PIN, or a password for your phone (see *Protecting Your Phone With Screen Locks*), you'll need to swipe up on the screen and then draw the pattern or enter the PIN/password to unlock the screen.

Getting to Know the Home Screen

The home screen is the starting point for your phone's applications, functions, and menus. You can customize your home screen by adding shortcuts, folders, widgets, and more.

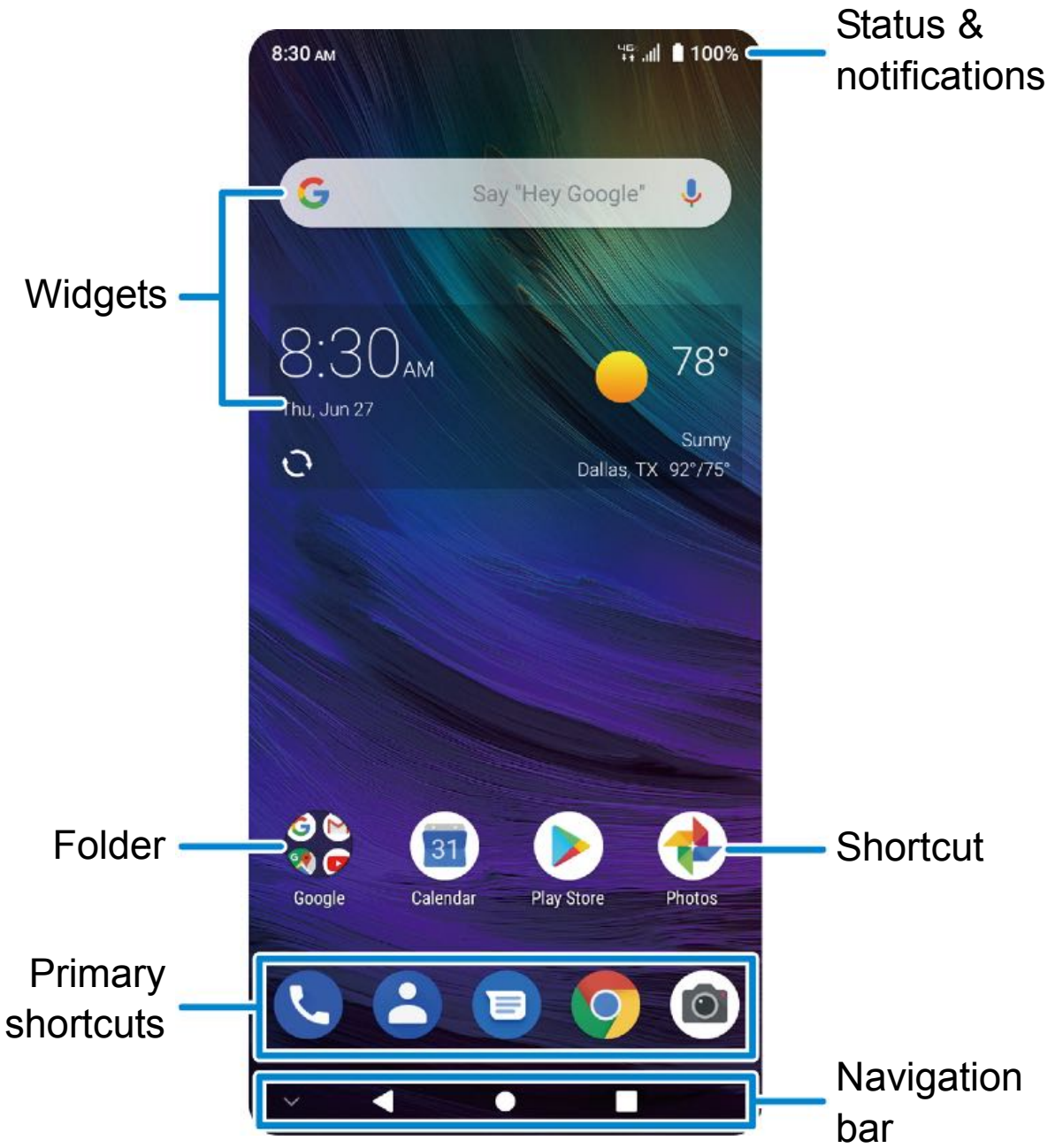

Extended Home Screen Panels

Your home screen is extendable, providing more space for shortcuts, widgets, and more. Add a few extended home screen panels and you can swipe left or right to switch between panels. You can also remove some panels or adjust their order.

NOTE:

Swipe right on the left-most panel to use the Google app.

To add a new home screen panel:

1. Touch and hold an empty area of the home screen.
2. Swipe left on the home screen thumbnails and touch .

To delete a home screen panel:

1. Touch and hold an empty area of the home screen.
2. Touch on the top right corner of a home screen thumbnail.
3. If prompted, touch **OK**. The items on the panel will also be removed.

To adjust the order of a home screen panel:

1. Touch and hold an empty area of the home screen.
2. Touch and hold a home screen thumbnail and drag it left or right to the place you need.

NOTE:

Touch at the top of a home screen thumbnail to set it as the main home screen.

Personalizing

Changing the System Language

1. Swipe up on the home screen and touch **Settings** > **System** > **Languages & input** > **Languages**.
2. Touch and hold the language you need and drag it to the top to switch to that language.

   To add a system language, touch **Add a language** and then the language you need.

Setting the Date and Time

1. Swipe up on the home screen and touch **Settings** > **System** > **Date & time**.
2. Set the date, time, time zone, and time format.
   - To adjust the date and time automatically, touch to turn on **Automatic date & time**.
   - To adjust the date and time manually, touch to turn off **Automatic date & time** and touch **Set date** / **Set time** to change the date and time.
   - To adjust the time zone automatically, touch to turn on **Automatic time zone**.
   - To adjust the time zone manually, touch to turn off **Automatic time zone** and touch **Select time zone** to set the correct time zone.

- To adjust the time format, touch to turn on/off **Use 24-hour format** or **Automatic 24-hour format**.

Changing the Ringtone, Notification Sound, and Alarm Sound

You can customize the default ringtone for incoming calls, the default notification sound, and the default alarm sound.

1. Swipe up on the home screen and touch **Settings > Sound > Advanced**.
2. Touch **Phone ringtone**, **Default notification sound**, or **Default alarm sound**.
3. Scroll through the list and select the ringtone you'd like to use.
4. Touch **OK**.

NOTES:

- Many applications have their own notification sound settings.
- See *Set a Ringtone for a Contact* for how to assign a special ringtone to an individual contact.
- When selecting ringtones, touch **Add ringtone** to select an audio file in your phone or microSDXC card.

Turning System Sounds On/Off

1. Swipe up on the home screen and touch **Settings** > **Sound** > **Advanced**.
2. In the **Other sounds and vibrations** section, touch the switches beside each option to turn it on or off.

Adjusting Volumes

1. Swipe up on the home screen and touch **Settings** > **Sound**.
2. Drag the sliders below **Media volume**, **Call volume**, **Ring volume**, **Alarm volume**, and **Notification volume** to adjust the volume for each type of audio.

Switching to Silent or Vibration Mode

You can set the phone to silent or vibration mode by using one of the following methods.

NOTE:

Silent and vibration modes will not silence your alarms.

- Press the **Volume** key and touch or to switch the phone to vibration or silent mode.

  NOTE:

  Press the **Volume** key and touch to restore sound.

- Swipe up on the home screen and touch **Settings** > **Sound** > **Notification mode** and select **Vibrate** or **Mute** to switch to vibration or silent mode.

NOTE:

Select **Ring** to restore sound.

- Swipe down from the top of the screen to open the notification panel and drag the panel downwards. Touch **Ring** or **Vibrate** to switch the phone to vibration or silent mode. See *Use Quick Settings*.

  NOTE:

  Touch **Silent** to restore sound.

Using Do Not Disturb Mode

You can limit interruptions with Do Not Disturb mode. This mode silences your phone so that it doesn't make sounds or vibrate when you don't want it to.

Turn on Do Not Disturb Mode

1. Swipe down from the top of the screen with two fingers to access the Quick Settings panel.
2. Swipe left and right to find the "Do not disturb" icon and touch it.

Set Do Not Disturb Mode

1. Swipe up on the home screen and touch **Settings** > **Sound** > **Do Not Disturb**.
2. Touch the following options as you need.
   - **Sound & vibration:** Turn on or off sound/vibration for listed items in Do Not Disturb mode.

- **Notifications:** Set notification behavior in Do Not Disturb mode. You can block sound or visuals from notifications, or customize more restrictions. Note that critical notifications for phone activity and status cannot be blocked.
- **Calls:** When Do Not Disturb is on, incoming calls are blocked. You can adjust settings to allow friends, family, or other contacts to reach you.
- **Messages, events & reminders:** When Do Not Disturb is on, messages, reminders, and events will be muted, except for the items you allow.
- **Duration:** Turn off Do Not Disturb automatically, manually, or set the duration each time you turn on Do Not Disturb mode.
- **Turn on automatically:** Use rules to turn on/off Do Not Disturb automatically. Touch an existing rule to set or use it, or touch **Add rule** to create new rules.

Applying New Wallpapers

You can set the wallpaper for the home screen and lock screen.

1. Touch and hold an empty place on the home screen.
2. Touch **WALLPAPERS**.
3. Select a built-in static wallpaper along the bottom, or touch **My photos** to select a picture on which you can pan and zoom to choose the area you need.
4. Touch **SET WALLPAPER**.
5. Choose where the wallpaper should be used by touching **Home screen**, **Lock screen**, or **Home screen and lock screen**.

NOTE:

You can also set the wallpaper by opening the **Settings** app and selecting **Display** > **Wallpaper**.

Setting the Theme

1. Touch and hold an empty place on the home screen.
2. Touch **HOME SETTINGS** > **Themes**.
3. Touch a theme to select it.

Setting the Home Screen Transition Effect

1. Touch and hold an empty place on the home screen.
2. Touch **HOME SETTINGS** > **Home screen effect**.
3. Pick an effect along the bottom and the phone will demonstrate how it works. When you have found one you like, touch the **Home** key to exit.

Changing the Screen Brightness

1. Swipe up on the home screen and touch **Settings** > **Display** > **Brightness level**.
2. Drag the slider to manually adjust the screen brightness.

NOTE:

With the light sensor, your phone can automatically adjust the screen brightness for available light. Touch **Adaptive brightness** in the Display settings screen to turn the feature on or off.

Protecting Your Phone With Screen Locks

You can protect your phone by creating a screen lock. When it is enabled, you can swipe up on the lock screen, and then draw a pattern or enter a numeric PIN or password to unlock the phone's screen and keys.

1. Swipe up on the home screen and touch **Settings** > **Security & location** > **Screen lock**.
2. Touch **None**, **Swipe**, **Pattern**, **PIN**, or **Password**.
   - Touch **None** to disable screen lock protection.
   - Touch **Swipe** to enable screen lock and allow unlocking with a "swipe" gesture. You can unlock the screen by touching the display and sliding up.
   - Touch **Pattern** to create a pattern that you must draw to unlock the screen.
   - Touch **PIN** or **Password** to set a numeric PIN or a password that you must enter to unlock the screen.
3. For Pattern, PIN, or Password, choose whether to further protect your phone with encryption. When it is enabled, you must enter the pattern, PIN, or password when powering on the phone in order to use it normally.
4. For Pattern, PIN, or Password, select how you want notifications and their contents to show when the phone is locked, and then touch **DONE**.

NOTE:

Remember the pattern, PIN, or password you set. Otherwise, you will have to upgrade the phone software to use the phone (see *Upgrading the Phone Software*).

Protecting Your Phone With Screen Pinning

You can use the screen pinning feature to keep an app in view, so others cannot switch to other apps or access your personal information.

Turn On Screen Pinning

1. Swipe up on the home screen and touch **Settings** > **Security & location** > **Advanced** > **Screen pinning**.
2. Touch the **On/Off** switch.
3. To automatically lock the phone after unpinning, switch on **Lock device when unpinning** and set up a screen lock.

   If you have set a screen lock, you can switch on **Ask for unlock pattern/PIN/password before unpinning**.

Pin a Screen

1. Ensure that screen pinning is turned on.
2. Touch the **Recent apps** key to view recent apps. If the app you want to keep in view is not in recent apps, open it first.
3. Swipe left and right to find the app card. Then touch the app icon at the top of the card and select **Pin**.

Unpin the Screen

1. To unpin the screen and return to normal use, touch and hold both the **Back** key and the **Recent apps** key.
2. If the screen is locked, swipe up on the lock screen and draw the pattern or enter the PIN/password.

Using Your Fingerprint

Register a Fingerprint

1. Swipe up on the home screen and touch **Settings** > **Security & location** > **Fingerprint** > **Fingerprint management**.
2. If you have not set a screen lock, choose one backup screen lock method to set the screen lock pattern, PIN, or password. If you have already set a screen lock, draw the pattern or enter the PIN/password.
3. Touch **REGISTER** or **Add fingerprint**.
4. Follow the prompts to record the center and the edges of a finger.
5. Touch **OK** when your fingerprint has been registered.

NOTE:

Touch an existing fingerprint record to change its name or delete it.

Set Fingerprint Actions

1. Swipe up on the home screen and touch **Settings** > **Security & location** > **Fingerprint** > **Fingerprint management**.
2. Enter the screen lock pattern, PIN or password you set.
3. You can set the following fingerprint actions.
   - **Unlock your phone:** Wake up the phone and unlock it with a registered fingerprint.
   - **Quick launch app:** When the screen is off or locked, you can quickly open a selected app with a registered fingerprint. Each registered fingerprint can be assigned to a different app.

NOTE:

You can also use any finger, registered or not, to take photos, answer calls, open the notification panel, or view recent apps by touching or swiping on the fingerprint sensor. Open **Settings** > **Security & location** > **Fingerprint** to set them up.

Knowing the Basics

Monitoring the Phone Status

The status bar at the top of the home screen provides phone and service status icons on the right side. Below are some of the icons you may see.

Indicator	What it means
	LTE connected
	Do not disturb mode on
	Vibration only mode on
	Silent mode on
	Battery low
	Battery full
	Battery charging
	Alarm set
	No signal
	Signal strength
	Airplane mode
	Connected to a Wi-Fi network
	Speaker on

	Phone microphone off
	Location service active
/	Wired headset connected

Managing Notifications

The status bar at the top of the home screen provides notification icons on the left. Below are some of the icons you may see.

Indicator	What it means
	New message
/	New message(s) from the Gmail™ app
	New message(s) from the Email app
	Missed call
	Call in progress
	Low battery
31	Upcoming event
?	New Wi-Fi network detected
/	Downloading/sending data
/	Song playing
	USB tethering on

Open/Close the Notification Panel

Notifications report the arrival of new messages, calendar events, and alarms, as well as ongoing events. You can open the notification panel to view the details of notifications.

- To open the notification panel, swipe your finger down on the home screen or from the top of the screen.
- To close the notification panel, swipe your finger up on the screen or touch the **Back** key.

Respond to or Remove a Notification

In the notification panel, you can respond to a notification or remove the notifications. The notification panel also supports expandable notifications that let you perform additional actions right from the notification itself.

- To respond to a notification, touch it.
- Slide down with one finger to expand certain notifications. You can also swipe two fingers vertically or pinch-zoom to expand or collapse certain notifications, or touch ⌄/⌃ to expand or collapse certain notifications and bundled notifications.
- To remove a notification, swipe it left or right. If you want to handle it later, swipe slightly and touch 🕓 to set the snooze time.
- To remove all notifications, touch **CLEAR ALL** below all the notifications.
- To manage notifications you have received, touch and hold a notification and then choose to turn off this type of notification.

NOTE:

If you turn off notifications for an app, you may miss its important alerts and updates. Some notifications (such as those from the system) cannot be turned off.

Use Quick Settings

The Quick Settings make it convenient to view or change the most common settings for your phone.

Swipe down with two fingers from the top of the screen, or open the notification panel and drag the panel downward to view the Quick Settings. You can swipe left or right to find all Quick Settings tiles.

To turn on or off settings quickly:

From the Quick Settings panel, touch a tile to turn its feature on or off.

Touch and hold certain tiles to access more settings options. For example, touch and hold the Wi-Fi tile to open Wi-Fi settings.

To customize the quick settings panel:

You can add, remove or rearrange the tiles on the Quick Settings panel.

Touch below the panel and do one of the following:

- Touch and hold a tile and drag it to the position you want.
- Touch and hold a tile and drag it below “Drag here to remove” to hide it.
- In the **Hold and drag to add tiles** section, drag a tile up to show it in the Quick Settings panel.

Managing Shortcuts and Widgets

Add Shortcuts and Widgets

1. To add a shortcut, swipe up on the home screen.

   To add a widget, touch and hold an empty area of the home screen and select **WIDGETS**.
2. Slide to browse the available applications or widgets.
3. Touch and hold a widget or an application icon and drag it to a home screen panel.

NOTE:

While holding the shortcut or widget, you can drag it to the right edge of the screen to create a new home screen panel and put the item on it.

Move Shortcuts or Widgets

1. Touch and hold a shortcut or widget on the home screen.
2. Drag it to the place you need.

Remove Shortcuts or Widgets

1. Touch and hold a shortcut or widget on the home screen.
2. Drag it to ✕ at the top.

Adjust Widget Size

1. Touch and hold a widget on the home screen and then release it.
2. An outline appears around the widget. Drag the outline to resize the widget.

NOTE:

Not all widgets can be resized.

Organizing With Folders

You can create folders on the home screen and add several shortcuts to a folder.
You can move or remove folders the same way as moving or removing shortcuts.

1. On the home screen, touch and hold the shortcut you want to add into a folder.
2. Drag the shortcut to at the top of the screen and release your finger. A new folder will be created and the shortcut is added into the folder.
3. To add more shortcuts into the folder, touch and hold each shortcut and drag it over the folder before releasing it.

NOTES:

- To remove a shortcut from a folder, touch the folder to open it. Touch and hold the shortcut and drag it to the home screen.
- Touch the folder and then touch the name field to rename the folder.

Rearranging the Primary Shortcuts

The home screen includes a customizable primary shortcuts area near the bottom above the navigation bar. You can keep up to five items in the primary shortcuts area visible from all home screens. Drag shortcuts or folders in or out of the area to rearrange them.

Editing Text

- **Move the insertion point:** Touch where you want to type. The cursor blinks in the new position, and a tab appears below it. Drag the tab to move the cursor.
- **Select text:** Touch and hold or double-tap within the text. The nearest word highlights, with a tab at each end of the selection. Drag the tabs to change the selection.
- **Cut or copy:** Select the text you want to manipulate. Then touch **Cut** or **Copy** to cut or copy the text to the clipboard.
- **Replace text with the clipboard text:** Select the text you want to replace. Then touch **Paste**.
- **Insert clipboard text in the text field:** Touch the tab below the cursor. Then touch **Paste**.

Opening and Switching Apps

Open an App

1. Swipe up on the home screen
2. Swipe up or down on the screen and touch an app to open it.

NOTES:

- Drag the slider on the right side of the screen to the initial letter of the app you need, or touch the search box at the top to search for apps.
- Touch ⋮ in the search box to sort the apps alphabetically, by the time they are installed, or by frequency of use.
- Some apps offer shortcuts to certain features. Touch and hold the app icon to get these shortcuts. You can also drag these shortcuts to the home screen as shortcut icons.

Switch Between Recently Opened Apps

1. Touch the **Recent apps** key. The apps you've used recently are displayed as a series of cards. Slide left and right to see all the cards.
2. Touch a card to open that app.

NOTES:

- You can swipe a card up to remove it from the screen, which will free up running memory on the phone. Touch **CLEAR ALL** to remove all cards.
- Touch the **Recent apps** key twice to switch to the most recent app you used.

Using Two Apps in Split-Screen Mode

You can work with two apps at the same time in split-screen mode.

NOTE:

Some apps may not support split-screen mode.

1. Open the first app you want to use and touch the **Recent apps** key.
2. Touch the app icon on top of the card of the first app and select **Split screen**.
3. Touch the second app among the recent app cards or touch the **Home** key and swipe up to select the second app.

To turn off split-screen mode, drag the middle of the border between the two apps to the top or bottom of the screen. The expanding app will be kept in full screen.

Uninstalling or Disabling an Application

1. Swipe up on the home screen.
2. Touch and hold an application icon and drag it to or at the top of the screen.
3. Touch **OK** to uninstall or disable the app.

NOTES:

- Some preinstalled apps cannot be uninstalled, and not all apps can be disabled.
- To find the disabled applications, swipe up on the home screen and touch **Settings** > **Apps & notifications** > **See all [number] apps** > **All apps** > **Disabled apps**. You can then touch an application and touch **ENABLE** to enable it.

Connecting to Networks and Devices

Connecting to Mobile Networks

Control Mobile Data Use

1. Swipe up on the home screen and touch **Settings** > **Network & internet** > **Mobile network**.
2. Touch the **Mobile data** switch to enable or disable mobile data use.

Check Access Point Names

To connect to the Internet you can use the default Access Point Names (APN). Swipe up on the home screen and touch **Settings** > **Network & internet** > **Mobile network** > **Advanced** > **Access Point Names** to check the default APN.

NOTE:

To set the APN to default settings, touch ⋮ > **Reset to default**.

Select Network Operator

1. Swipe up on the home screen and touch **Settings** > **Network & internet** > **Mobile network** > **Advanced**.
2. Touch to turn off **Automatically select network**.
3. Wait for the phone to search for available networks and touch a network in the network list to register manually.

Connecting to Wi-Fi

Wi-Fi is a wireless networking technology that can provide Internet access at distances of up to 300 feet (100 meters), depending on the Wi-Fi router and your surroundings.

Turn Wi-Fi On and Connect to a Wi-Fi Network

1. Swipe up on the home screen and touch **Settings** > **Network & internet** > **Wi-Fi**.
2. Slide the **Use Wi-Fi** switch to the **On** position to turn on Wi-Fi.
3. Touch a network name to connect to it.
4. If the network is secured, enter the password and touch **CONNECT**.

NOTE:

Your phone automatically connects to previously used Wi-Fi networks when they are in range.

Get Notified of Open Networks

1. Swipe up on the home screen and touch **Settings** > **Network & internet** > **Wi-Fi**.
2. Touch **Wi-Fi preferences**.
3. Slide the **Wi-Fi notification** switch to the On position.

When Wi-Fi is on, you receive notifications in the status bar when your phone detects an open Wi-Fi network. Switch off this option to turn off notifications.

Add a Wi-Fi Network

You can add a Wi-Fi network if the network does not broadcast its name (SSID) or to add a Wi-Fi network when you are out of range.

To connect to a secured network, you first need to get the security details from the network's administrator.

1. Swipe up on the home screen and touch **Settings** > **Network & internet** > **Wi-Fi**.
2. Slide the **Use Wi-Fi** switch to the **On** position.
3. At the bottom of the available Wi-Fi networks, touch **Add network**.
4. Enter the network SSID (name). If necessary, enter security or other network configuration details.
5. Touch **SAVE**.

Forget a Wi-Fi Network

You can make your phone forget about the details of a Wi-Fi network that you added—for example, if you don’t want the phone to connect to it automatically or if it is a network that you no longer use.

1. Swipe up on the home screen and touch **Settings** > **Network & internet** > **Wi-Fi**.
2. Touch **Saved networks**.
3. Touch the Wi-Fi network name and then touch **FORGET**.

Connecting to *Bluetooth* Devices

Bluetooth is a short-range wireless communication technology. Phones or other devices with *Bluetooth* capabilities can exchange information wirelessly within a few feet. The *Bluetooth* devices must be paired before the communication is performed.

Change the Device Name

1. Swipe up on the home screen and touch **Settings > Connected devices > Connection preferences > Bluetooth**.
2. Slide the **Bluetooth** switch to the **On** position if *Bluetooth* is off.
3. Touch **Device name**.
4. Edit the name and touch **RENAME**.

Pair With Another *Bluetooth* Device

1. Swipe up on the home screen and touch **Settings > Connected devices > Pair new device**.

   Your phone automatically turns *Bluetooth* on and scans for and displays the IDs of all available *Bluetooth* devices in range.
2. Touch the device you want to pair with.
3. If necessary, confirm that the *Bluetooth* passkeys are the same between the two devices and touch **PAIR**. Alternatively, enter a *Bluetooth* passkey and touch **PAIR**.

   Pairing is successfully completed when the other device accepts the connection or the same passkey is entered.

NOTE:

The *Bluetooth* passkey may be fixed for certain devices, such as headsets and hands-free car kits. You can try entering 0000 or 1234 (the most common passkeys) or refer to the documents for that device.

Forget a *Bluetooth* Device

You can make your phone forget its pairing connection with another *Bluetooth* device. To connect to the device again, you need to search for it and enter or confirm a passkey again.

1. Swipe up on the home screen and touch **Settings** > **Connected devices**.
2. Ensure that Bluetooth is turned on and touch **Previously connected devices**.
3. In the list of paired devices, touch ⚙ beside the *Bluetooth* device you want to forget.
4. Touch **FORGET** > **FORGET DEVICE**.

Send Data via *Bluetooth*

1. Open the appropriate application and select the file or item you want to share.
2. Select the option for sharing via *Bluetooth*. The method may vary by application and data type.
3. Touch a *Bluetooth* device the phone has paired with or wait for it to search for new devices and touch one of them.

Receive Data via *Bluetooth*

1. Turn *Bluetooth* on before trying to receive data via *Bluetooth*.
2. Touch **ACCEPT** to start receiving the data. If necessary, swipe down on the status bar, and touch **ACCEPT** on the *Bluetooth* sharing notification.

Depending on your storage setting and whether a microSDXC card is installed, received files are stored automatically in a dedicated folder (*bluetooth*, for instance). You can access them with the File Manager app.

Connecting to Your Computer via USB

You can connect your phone to a computer with a USB cable to transfer files in both directions, charge the phone, or install software to update or repair the phone.

Connect Your Phone to a Computer via USB

1. Connect your phone to the PC with a USB cable.
2. On the window opened, touch **ALLOW** to transfer files, **DENY** to charge the phone, or **Other USB options** to choose one of the following options:
   - **MTP (File Transfer):** Transfer files between the phone and the computer.
   - **PTP:** Transfer photos or files if MTP mode is not supported by the computer.
   - **Charge this device:** Charge your phone via USB.

- **System Update:** Install Software Upgrade Assistant on your computer and update or repair the phone.

Disconnect Your Phone From the Computer

To disconnect the phone from the computer, simply unplug the USB cable when you're finished.

Using the microSDXC Card as Portable or Device Storage

You can use your microSDXC card as portable storage when there's already content such as your media and other files so that you don't lose them.

If your microSDXC card is new or doesn't have content you want to keep, you can also set it up as an extension of the device storage, and this requires formatting that prevents the microSDXC card from working with other devices.

CAUTION:

As part of the device storage, the microSDXC card may have data on it that is necessary for some apps to function normally. Therefore, do not remove or replace the card randomly.

Set Up the microSDXC Card as Portable Storage

When you install a microSDXC card that has not been used on your phone before, the phone will mount the card as portable storage by default.

To remove the microSDXC card from your phone:

If you need to remove the microSDXC card used as portable storage while the phone is on, you must unmount it first.

1. Swipe up on the home screen and touch **Settings** > **Storage**.
2. Touch ⏏ next to the microSDXC card name in the Portable storage section.
3. When the screen prompts the card is safely ejected, you can remove it from the phone.

To erase and format the microSDXC card:

1. Swipe up on the home screen and touch **Settings** > **Storage**.
2. Touch the microSDXC card name in the Portable storage section.
3. Touch **Format** > **FORMAT SD CARD**.
4. Touch **Done** when formatting is finished.

CAUTION:

The formatting procedure erases all the data on the microSDXC card, after which the files CANNOT be retrieved.

Set Up the microSDXC Card as Device Storage

If your microSDXC card is new or doesn't have content you want to keep, you can format the card and use it as part of the device storage. If you move the microSDXC card to another device, it'll be formatted before it can be used.

1. Swipe up on the home screen and touch **Settings** > **Storage**.
2. Touch the microSDXC card name in the Portable storage section.
3. Touch **Format as internal** > **FORMAT SD CARD**.

CAUTION:

The formatting procedure erases all the data on the microSDXC card, after which the files CANNOT be retrieved.

4. The phone will prompt you to move your photos, files and other data from the phone to the microSDXC card. Select **Move content** or **Move content later**. Follow the onscreen instructions to continue.
5. Touch **Done**.

To move data between the phone and the microSDXC card:

With the microSDXC card as part of the device storage, you can move your photos, files and other data between the phone and the card any time.

1. Swipe up on the home screen and touch **Settings** > **Storage**.
2. To move data from the phone to the microSDXC card, touch the microSDXC card name; to move data from the card to the phone, touch **Internal shared storage**.
3. Touch ⋮ > **Migrate data**.
4. Touch **Move content**.
5. If prompted, touch **Done**.

NOTE:

Whenever you move data between the phone and the microSDXC card, the destination is used to save new apps and personal data (such as photos and videos) and only the destination is accessible from a computer.

To remove the microSDXC card from your phone:

If you need to remove the microSDXC card used as device storage while the phone is on, you must unmount it first.

1. Swipe up on the home screen and touch **Settings** > **Storage**.
2. Touch your microSDXC card name below **Device Storage**.
3. Touch ⋮ > **Eject**.

   NOTE:

   Before ejecting the card, ensure that you have moved data and apps to the phone.
4. Touch **EJECT**.
5. When the screen prompts the card is safely ejected, you can remove it from the phone.

To reformat the microSDXC card as portable storage:

If you no longer want to use your microSDXC card as device storage, you can reformat the card as portable storage.

NOTE:

Before the formatting, ensure that you have moved data and apps to the phone.

1. Swipe up on the home screen and touch **Settings** > **Storage**.
2. Touch your microSDXC card name below **Device Storage**.
3. Touch ⋮ > **Format as portable**.
4. Touch **FORMAT**.
5. Touch **Done**.

CAUTION:

The formatting procedure erases all the data on the microSDXC card, after which the files CANNOT be retrieved.

Sharing Mobile Data Through Tethering

If your computer can obtain an Internet connection via USB cable or *Bluetooth*, you can configure your phone to share its mobile data connection with your computer.

NOTE:

You cannot transfer files between your phone and your computer when the phone is USB tethered.

1. Swipe up on the home screen and touch **Settings** > **Network & internet** > **Hotspot & tethering**.
2. Touch **USB tethering** or **Bluetooth tethering**.
   - For USB tethering, connect your phone to the target device with the supplied USB cable before touching **USB tethering**.
   - For Bluetooth tethering, pair your phone with the other device via *Bluetooth* and set the device to obtain data connection via *Bluetooth*.

NOTE:

To stop sharing your data connection, switch off **USB tethering** or **Bluetooth tethering**.

Phone Calls

You can place calls from the Phone app, the Contacts app, or other apps or widgets that display contact information. Wherever you see a phone number, you can usually touch it to dial.

Placing and Ending Voice Calls

Place a Voice Call by Dialing

1. From the home screen, touch > .
2. Enter the phone number or the contact name with the dialpad. Touch to delete incorrect digits/letters.

   NOTE:

   As you enter the phone number or the contact name, your phone searches for matching information in your contacts. If you see the number and contact you want to call, touch it to place the call immediately.

3. Touch below the keypad to dial the call.

NOTES:

- To make an international call, touch and hold the **0** key to enter the plus (+) symbol. Next, enter the country code followed by the city/area code and then the phone number.
- To redial the last call you made, open the dialpad, touch and touch again.

End a Call

During a call, touch on the screen.

Answering or Rejecting Voice Calls

When you receive a voice call, the incoming call screen opens, displaying the Caller ID or the information about the caller that you've entered in the Contacts app. You can answer or reject the call, or reject it with a text message.

Answer a Voice Call

To answer an incoming call,

- If the phone screen is active, touch **ANSWER**.
- If the phone screen is locked, swipe up on the screen to answer the call.

NOTES:

- To silence the ringer before answering the call, press the **Volume** key or the **Power** key.
- For instructions on answering a call with RTT, see *Answer an RTT Call*.

Reject a Voice Call

To reject an incoming voice call:

- If the phone screen is active, touch **DECLINE** to reject the call, or touch **MESSAGE** to reject the call and send a message to the caller.

- If the phone screen is locked, swipe down on the screen to reject the call, or swipe away from to reject the call and send a message to the caller.

NOTE:

To edit the preset text responses, open the **Phone** app and touch > **Settings** > **Quick responses**.

Using Real-Time Text (RTT)

Your phone supports Real-Time Text. If you or person on the other end of the line has a hearing or speech impairment, you can use RTT on top of a voice call for a real-time conversation.

NOTES:

- You can use RTT only when the phone is connected to the 4G LTE network or a Wi-Fi network (with Wi-Fi calling enabled).
- Text conversation will be on pause when the RTT call is on hold.
- Some RTT features and settings may not be supported under or across different networks.

Set Up RTT Work Mode

1. From the home screen, touch > > **Settings** > **Accessibility** > **Real Time Text (RTT) call**.
2. Touch **RTT operation mode** and choose one of the following to set when RTT options should be available:
   - **Visible during calls:** In this mode, calls will be placed and answered as voice-only calls by default unless you receive an

incoming RTT call. You can still switch from voice-only to RTT during the calls. See *Switch From Voice-only Calls to RTT Calls*.

- **Always visible:** In this mode, you may select the mode for outgoing calls.

3. When RTT operation mode is set as **Always visible**, touch **RTT on Outgoing Call** to set the default mode for outgoing calls. You can choose to place all outgoing calls as RTT calls automatically or choose manually each time before placing the call.

Place an RTT Call

When the RTT operation mode is set as **Always visible**, you can place an RTT call directly.

1. Enter the phone number with the dialpad as usual.
2. Touch .
3. If RTT on Outgoing Call is set as **Manual**, touch **RTT Voice call**.

When the call is connected, the RTT message screen and keyboard appear automatically.

Answer an RTT Call

Regardless of your RTT operation mode settings, an incoming RTT call is answered as an RTT call, with the RTT message screen and keyboard appearing automatically.

NOTE:

This feature may not work under or across different networks.

If the RTT operation mode is set as **Always visible**, you can choose to answer incoming voice-only calls as RTT calls by touching **RTT ANSWER** (when the screen is unlocked) or swiping from (when the screen is locked) at the bottom right.

Switch From Voice-only Calls to RTT Calls

During a voice-only call, touch to start an RTT conversation. The voice conversation will not be affected. The other party can also make the switch, and your phone will show the message screen and keyboard automatically.

Working With the Call History

The call history is a list of all the calls you've placed, received, or missed. It provides a convenient way to redial a number, return a call, or add a number to your Contacts.

To open the call history, open the **Phone** app and touch **> Call history**.

Place a Call From the Call History

1. Open the call history.
2. Touch a number for more options about the call, or touch beside it to call back.

NOTE:

You can touch **MISSED**, **INCOMING**, or **OUTGOING** to filter the records by call type.

Save a Call History Number to a Contact

1. Open the call history.
2. Touch the number.
3. To add the number to an existing contact, touch **Add to a contact** and select a contact in the list. To add a new contact, touch **Create new contact**.
4. Edit the contact information if necessary, and touch **SAVE**.

Retrieve RTT Call Transcript

1. Open the call history.
2. Touch a number with below it.
3. Touch **Call details**.
4. In the call list, touch to check the transcript during that call.

Take Other Actions on a Call History Entry

1. Open the call history.
2. Touch a number and then touch **Call details** to view more call information. While viewing the call details, you can:
   - Touch **Delete** to delete the entry.
   - Touch **Edit number before call** to edit the number in the dialer before calling it.
   - Touch **Copy number** to copy the phone number to the clipboard.

NOTE:

You can touch ⋮ > **Clear call history** in the call history screen to delete all history records.

Calling Your Contacts

1. From the home screen, touch .
2. Touch **Favorites** or **Contacts** to find the contact you want to call. Your favorite contacts and frequently called contacts are displayed in the **Favorites** tab.
3. Touch a contact in the **Favorites** tab, or touch beside a contact in the **Contacts** tab.

Checking Voicemail

If you have set the phone to divert calls to voicemail, callers can leave voicemail messages when they cannot reach you. Here's how to check the messages they left.

1. From the home screen, touch > .
2. Touch and hold the **1** key in the dialer. If prompted, enter your voicemail password.
3. Follow the voice prompts to listen to and manage your voicemail messages.

NOTE:

See *Set Voicemail* for how to set your voicemail service. For detailed information, please contact the service provider.

Using Options During a Call

During a call, you will see a number of on-screen options. Touch an option to select it.

- Touch to make another call separately from the first call, which is put on hold.
- Touch to switch to the keypad when you need to enter a code (for example, the PIN for your voicemail or bank account) during the call.
- Touch to go to **Contacts**.
- Touch to mute or unmute your microphone.
- Touch to turn the speakerphone on or off.
- Touch to switch from voice-only calls to RTT (Real-Time Text) calls.

  NOTE:

  RTT only works on 4G LTE network.
- Touch > **Swap** or the held call near the top of the screen to put the caller you are speaking to on hold, and switch to the other call that has been put on hold.
- Touch to merge the separate calls into a single conference call.
- Touch to end the current call.

- During an RTT call, touch ⋮ > **Hide RTT keyboard** to close the RTT conversation and keyboard. You can then touch ET to restore the RTT conversation and keyboard.
- During an RTT call, touch ⋮ > **DTMF keypad** to use the keypad to interact with automated systems with DTMF tones. You can touch **Hide** to return to your RTT messages.

WARNING!

Because of higher volume levels, do not place the phone near your ear during speakerphone use.

Managing Multi-party Calls

When the three-way call feature is available, you can switch between two calls or set up a conference call.

NOTES:

- Options and interface will vary. The three-way call feature needs network support and may result in additional charges. Please contact your service provider for more information.
- Three-way call feature is not available when you have an ongoing RTT call.

Switch Between Current Calls

When you're on a call, you can place/answer a second call without ending the first one.

To place the second call:

Once you have established the first call, touch and dial the second number.

To answer the second call:

When you're on a call and another call comes in:

- Swipe up to answer the call. (This puts the first call on hold and answers the second call.)
- Swipe from to answer the call. (This ends the first call and answers the second call.)
- Swipe down to reject the second call.
- Swipe from to reject the second call and select a preset text message or write one to send to the caller.

To switch between two calls:

If the second call is an incoming call, touch > **Swap** or the held call near the top of the screen.

Set Up a Conference Call

With this feature, you can talk to two people at the same time.

1. Place the first call.
2. Once you have established the connection, touch and dial the second number.
3. When you're connected to the second party, touch .

If one of the people you called hangs up during your call, you and the remaining caller stay connected. If you initiated the call and are the first to hang up, all callers are disconnected.

To end the conference call, touch .

Adjusting Your Call Settings

You can configure a number of settings for the Phone application.

NOTE:

Some call options are displayed only when these features are available, and some features require network support and may result in additional charges. Please contact your service provider for more information.

Set Contact Display Options

You can set the order of the contacts displayed in the **Contacts** tab of the Phone app.

1. From the home screen, touch > > **Settings** > **Display options**.

2. Touch **Sort by** or **Name format** to set the order of the contacts and the format of the contact names.

Set Sound and Vibration

Set the sound and vibration for incoming calls as well as dialpad sounds.

1. From the home screen, touch > > **Settings** > **Sounds and vibration**.
2. Touch the option you want to configure.
   - Touch **Phone ringtone** to select the ringtone for incoming call notification.
   - Touch **Also vibrate for calls** to enable/disable vibration for incoming call notification.
   - Touch **Keypad tones** to play/mute sounds when you touch the dialpad keys.

Set Options for Answering and Ending Calls

When enabled, the options allow you to end a call by pressing the **Power** key or make the phone vibrate when a call is answered.

1. From the home screen, touch > > **Settings** > **Answer and end calls**.
2. Touch **Power button ends call** or **Vibrate when call is answered**.

Set Speed Dials

You can touch and hold the 1~9 keys from the dialer to call the corresponding speed dial number.

The number 1 key is reserved to speed dial your voicemail.

To assign a speed dial key:

1. From the home screen, touch > > **Settings** > **Speed dial**.
2. Touch a speed dial entry.
3. Touch a contact from the contact list.

Edit Quick Response to Rejected Callers

1. From the home screen, touch > > **Settings** > **Quick responses**.
2. Touch a text message to edit it.
3. Touch **OK** to save the message.

Set Wi-Fi Calling

1. From the home screen, touch > > **Settings** > **Call settings** > **Wi-Fi calling**.
2. Touch the **Wi-Fi Calling** switch to enable/disable this feature. When Wi-Fi calling is enabled, touch **Update Current Emergency Address** to set the address for emergency (E911) call responders.

Forward Incoming Calls

The call forwarding feature allows you to forward your incoming calls to another phone number.

1. From the home screen, touch > > **Settings** > **Call settings** > **Call forwarding**.
2. Touch an available option to enable or disable it.

Block Certain Numbers

The call blocking feature allows you to forbid calls and messages from certain numbers.

1. From the home screen, touch > > **Settings** > **Blocked numbers**.
2. Touch **ADD A NUMBER**.
3. Enter a phone number or touch to select one from the contact list.
4. Touch **BLOCK**.

NOTE:

To unblock a number, touch next to the number and touch **UNBLOCK**.

Set Voicemail

1. From the home screen, touch > > **Settings**.
2. Touch **Voicemail** > **Advanced Settings** to configure voicemail settings.
   - Touch **Service** to select the voicemail service provider. Your carrier is the default.
   - Touch **Setup** to view or change the voicemail number.

Set Real-Time Text (RTT) Options

When you are connected to the 4G LTE network or a Wi-Fi network (with Wi-Fi calling enabled), from the home screen, touch > > **Settings** > **Accessibility** > **Real Time Text (RTT) call** to set RTT options. For details, see *Set Up RTT Work Mode*.

Set Hearing Aids

Your phone supports HAC (Hearing Aid Compatibility) function. When you turn on the hearing aid compatibility and use a hearing aid with a telecoil to answer the phone, it will help you hear more clearly during the phone call.

1. From the home screen, touch > > **Settings** > **Accessibility**.
2. Touch **Hearing aids** to turn on/off hearing aid compatibility.

CAUTION:

Do not turn on the Hearing aids option unless you use a hearing aid with a telecoil. Using this setting without a hearing aid or with a hearing aid without a telecoil may be harmful to your hearing.

Contacts

You can add contacts on your phone and synchronize them with the contacts in your Google account or other accounts that support contact syncing.

To see your contacts, touch on the home screen.

Checking Contact Details

1. From the home screen, touch .
2. Scroll through the list to view all your contacts.
3. Touch a contact to view its details.

Adding a New Contact

1. From the home screen, touch .
2. Touch to add a new contact.
3. Enter the contact name, phone numbers, and email addresses. Touch **More fields** to enter other information. If you have multiple account types associated with your phone, touch **Saving to** and select an account. If a sync account is selected, the contacts can be synced automatically with the account online.
4. Touch **SAVE** to save the contact.

Importing, Exporting, and Sharing Contacts

You can import/export contacts from/to the phone storage or a microSDXC card. This is especially useful when you need to transfer contacts between different devices. You can also quickly share your contacts using *Bluetooth*, Email, Gmail, Google Drive, or Messages.

Import Contacts From the microSDXC Card or Phone Storage

1. From the home screen, touch .
2. Touch > **Settings** > **Import** > **.vcf file**.
3. If prompted, select the account the contacts will be imported to.
4. Navigate to the folder where the file is and touch the file.

Export Contacts to the microSDXC Card or Phone Storage

1. From the home screen, touch .
2. Touch > **Settings** > **Export** > **Export to .vcf file**.
3. The phone will prompt you with the name of the vCard file. You can change the default name or touch to change the directory that the file will be saved to.
4. Touch **SAVE** to create the file.

Share Contacts

1. From the home screen, touch .
2. Touch > **Settings** > **Export** > **Share all contacts**.
3. Open the notification panel and touch **Finished exporting contacts**.
4. Choose how to share the contacts. The options available depend on the applications and services installed.

NOTE:

To share a few selected contacts, touch and hold one in the contact list and then touch the other ones you need. After the selection, touch and choose how to share them.

Working With Favorite Contacts

You can mark contacts as favorite to put them at the top of the contacts list.

Add a Contact to Favorites

1. From the home screen, touch .
2. Touch a contact and then touch at the top of the screen.

Remove a Contact From Favorites

1. From the home screen, touch .
2. Touch a favorite contact and then touch .

Managing Contacts With Labels

View Your Contact Labels

1. From the home screen, touch .
2. Touch to view existing contact labels in the Labels section.
3. Touch a label to view contacts with that label.

NOTE:

To send a message or an email to all contacts with the label, touch the label and touch > **Send message / Send email**. Or touch the label and touch > **Multi-select**, check the contacts you need, and touch > **Send message / Send email**.

Set Up a New Label

1. From the home screen, touch .
2. Touch > **Create label**.
3. Enter the label name and touch **OK**.
4. Touch **ADD CONTACTS** or and select the contact you wish to add the label to. To add multiple contacts, touch and hold one contact to select it. Then touch the others contacts and touch **ADD**.

Delete a Label

1. From the home screen, touch .
2. Touch and then touch a label.
3. Touch > **Delete label**.
4. Touch **OK**. The contacts themselves will not be deleted.

Edit a Label

1. From the home screen, touch .
2. Touch and then touch a label.
3. Touch > **Remove contacts** or **Rename label**.
4. Touch to remove the corresponding contact from the label, or edit the label name and touch **OK**.

Searching for a Contact

1. From the home screen, touch .
2. Touch to search.
3. Enter the contact name or other information (such as phone number) you want to search for. The contacts matched will be listed.

Editing Contacts

Edit Contact Details

1. From the home screen, touch .
2. Touch a contact and then touch .
3. Edit the contact and touch **SAVE**.

Set a Ringtone for a Contact

Assign a special ringtone to a contact, so you know who is calling when you hear the ringtone.

1. From the home screen, touch .
2. Touch a contact you want to set a ringtone for, and then touch > **More fields** > **Default ringtone**.
3. Select a ringtone you like and touch **OK**.
4. Touch **SAVE**.

NOTE:

When selecting ringtones, touch **Add ringtone** to select an audio file in your phone or microSDXC card.

Delete Contacts

1. From the home screen, touch .
2. Touch and hold the contact you want to remove.
3. Check more contacts if needed, and then touch > **OK**.

Link Contacts

If there are duplicate entries for the same person in your contacts, you can merge all the separate information of a contact into one entry in the Contacts list.

1. From the home screen, touch .
2. Touch and hold a contact to select it.
3. Touch to select the duplicate contact(s).
4. Touch > **Link**.
5. Touch **LINK** to confirm. All selected contacts are merged into one entry in the contacts list.

Separate Contact Information

If contact information was linked in error, you can separate the information back into individual contacts on your phone.

1. From the home screen, touch .
2. Touch a linked contact you want to separate.
3. Touch > **View linked contacts** > **UNLINK**.
4. Touch **UNLINK** to confirm.

Web Accounts

Adding or Removing Accounts

You can add multiple Google accounts, Microsoft Exchange ActiveSync® accounts, and other kinds of accounts, depending on the apps installed on your phone.

Add an Account

1. Swipe up on the home screen and touch **Settings** > **Accounts** > **Add account**.
2. Touch the type of account you want to add.
3. Follow the on-screen steps to enter the information about the account. Most accounts require a username and password, but the details may vary. You may also need to obtain some information from IT support or your system administrator.

When the account is successfully added, it is displayed in the Accounts menu in Settings.

Remove an Account

Removing an account will delete it and all information associated with it, such as emails and contacts, from your phone.

1. Swipe up on the home screen and touch **Settings** > **Accounts**.
2. Touch the account you'd like to remove.
3. Touch **REMOVE ACCOUNT** > **REMOVE ACCOUNT**.

Configuring Account Sync

Configure Auto Sync Setting

1. Swipe up on the home screen and touch **Settings** > **Accounts**.
2. Touch **Automatically sync data** to enable or disable automatic sync.
3. Touch **OK**.
   - When automatic sync is turned on, changes you make to information on your phone or on the web are automatically synced with each other.
   - When automatic sync is turned off, you need to sync manually to collect emails, updates, or other recent information.

Sync Manually

1. Swipe up on the home screen and touch **Settings** > **Accounts**.
2. Touch the account you want to sync.
3. Touch **Account sync** > ⋮ > **Sync now**.

Change an Account's Sync Settings

1. Swipe up on the home screen and touch **Settings** > **Accounts**.
2. Touch the account.
3. Touch **Account sync**. The Account sync screen appears, showing a list of information the account can sync.
4. When auto sync data is enabled, switch items on or off as you need. The enabled types of information will be kept in sync automatically between the phone and the web. When auto sync data is disabled, touch a listing to sync that type of information between the phone and the web.

Email

Swipe up on the home screen and touch **Email**. Use it to read and send emails from Microsoft Exchange ActiveSync, Gmail, Yahoo!®, AOL, and more.

Setting Up the First Email Account

1. When you open **Email** for the first time, touch an email server and then enter your email address and password.
2. Touch **NEXT** to let the phone retrieve the network parameters automatically.

   NOTE:

   You can also enter these details manually by touching **MANUAL SETUP** or if automatic setup fails.

3. Follow the on-screen instructions to finish the setup.

Your phone will show the inbox of the email account and start to download email messages.

Checking Your Emails

Your phone can automatically check for new emails at the interval you set when setting up the account. You can also check new emails manually by dragging down on the message list. Touch **LOAD MORE** at the bottom of the email list to download earlier messages.

You can adjust how often your account downloads new emails. From your inbox, touch ☰ > **Settings** > name of the account > **Sync settings** > **Sync frequency**. Touch an option to select it.

Responding to an Email

You can reply to or forward an email that you receive. You can also delete emails and manage them in other ways.

Reply to or Forward an Email

1. Open the email you want to reply to or forward from the Inbox.
2. Choose one of the following:
   - To reply to the sender, touch ↩.
   - To reply to the sender and all recipients of the original message, touch ↩↩.
   - To forward the email to someone else, touch ➡.
3. Edit your message and touch ➢.

Mark an Email as Unread

You can return a read email to the unread state—for example, to remind yourself to read it again later. You can also mark a batch of emails as unread.

- While reading a message, touch ⋮ > **Mark unread**.
- While in a message list (for instance, the inbox), touch the sender icon on the left and then touch ✉.

Delete an Email

You can delete an email from its folder. You can also delete a batch of emails.

- While reading a message, touch .
- While in a message list (for instance, the Inbox), touch the sender icon on the left and then touch .

NOTE:

If you accidentally delete an email, touch **UNDO** to retrieve it.

Writing and Sending an Email

1. Open your email Inbox and touch .

   NOTE:

   If you have more than one email account added on the phone, touch the **From** field to select the account you want to use for sending the message.

2. Enter a contact name or email address in the **To** field. Separate each recipient with a space. You can also touch **+** to select recipients from your contacts or history.

   NOTE:

   To send a carbon copy or blind carbon copy to other recipients, touch beside the **To** field to open the Cc/Bcc fields and enter the contact names or email addresses.

3. Enter the email subject and compose the email text.

4. Touch to add audio files, images, videos, and other types of files as attachments.
5. Touch near the top right of the screen to send the message.

Adding and Editing Email Accounts

Add an Email Account

After setting up your first email account (see *Setting Up the First Email Account*), you can add more email accounts and manage them separately.

1. Open the Email app.
2. Touch > **Settings** > **Add account**.
3. Set up the account as you did with the first one.

Edit an Email Account

You can change a number of settings for an account. The options you can configure depend on the type of account.

1. Open the Email app.
2. Touch > **Settings** and touch the account whose settings you want to change.
3. Make the changes you want and touch or the **Back** key when you finish.

Remove an Email Account

1. Open the Email app.
2. Touch ☰ > **Settings** and touch the account you want to remove.
3. Touch **Remove account from this device** > **OK**.

Changing General Email Settings

General settings apply to all email accounts you add.

1. Open the Email app.
2. Touch ☰ > **Settings** > **General settings**.
3. Make the changes you want and touch ← or the **Back** key when you finish.

Messages

You can use Messages to exchange text messages (SMS), multimedia messages (MMS), and chat messages.

Opening the Messages Screen

Touch on the home screen.

The Messages screen opens, where you can create a new message, search for messages, or open an existing conversation.

- Touch **Start chat** to write a new text or multimedia message.
- Touch to search for a message using keywords.
- Touch an existing conversation to open the exchanged messages.

Sending a Message

1. On the Conversations screen, touch **Start chat**.
2. Add recipients in one of the following ways.
   - ▶ Manually enter the recipient's number or the contact name. If the phone presents a few suggestions, touch the one you want to add.
   - ▶ Touch a contact listed below the To field.
   - ▶ To add more recipients for a group conversation, touch to add more recipients and then touch .

3. Touch the Text message field and enter the message text. Touch ⊕ to add emoji to your text message.
4. If you want to send a multimedia message, touch ⊕ to add pictures, audio, videos, or location to the message.
5. Touch >.

NOTES:

- You can also include email addresses as recipients for multimedia messages.
- Do not add any attachment if you want to send a text message. Otherwise, you may be charged for a multimedia message.

Replying to a Message

Messages you receive are appended to existing conversations of the same number. If the new message comes from a new number, a new conversation is created.

1. On the Messages screen, touch the conversation that has the message you want to reply to.
2. Type your reply in the text field at the bottom. You can touch ⊕ if you want to reply with an MMS.
3. Touch >.

Forwarding a Message

1. On the Messages screen, touch the conversation that has the message(s) you want to forward.
2. Touch and hold one message you want to forward, and then touch ⋮ > **Forward**.
3. Touch the conversation you'd like to forward the message(s) to, or touch **New message** to enter new recipient(s).
4. Edit the message if necessary and touch >.

Deleting Messages or Conversations

Delete a Message in a Conversation

1. On the Messages screen, touch a conversation.
2. Touch and hold the message you want to delete.
3. Touch 🗑 > **Delete**.

Delete Message Conversations

1. On the Messages screen, touch and hold the conversation you want to delete.
2. If there are more conversations you want to delete, touch them one by one.
3. Touch 🗑 > **Delete**.

Web Browser

Use Chrome to view web pages and search for information.

Opening the Browser

Touch on the home screen to launch the web browser. The browser also opens when you touch a web link—for example, in an email or a text message.

1. Open the Chrome app.
2. Touch the address box at the top.
3. Enter the address (URL) of a web page, or enter terms you want to search for.
4. Touch a URL or search suggestion or touch the enter key on the keyboard to open the web page or search results.

NOTE:

Touch the **Back** key or > to go to the previous or the next web page.

Using Multiple Browser Tabs

You can open several web pages at the same time (one page in each tab) and switch between them freely.

Open a New Browser Tab

Touch ⋮ > **New tab / New incognito tab**. A new browser window opens

Switch Between Browser Tabs

1. Touch the 2 icon. The number in the icon indicates the number of currently active browser windows. Opened web pages will be listed. Swipe up and down to see them all.
2. Touch a thumbnail to switch to that tab.

NOTE:

Swipe a thumbnail horizontally or touch ⊗ to close the tab.

Downloading Files

1. Touch and hold an image or a link to a file or to another web page.
2. In the menu that opens, touch **Download image** or **Download link**.

The downloaded files are saved to your phone or the microSDXC card. You can view or open them by touching ⋮ > **Downloads** in Chrome.

Camera

You can take photos and record videos. Photos and videos are stored on the microSDXC card, if you have installed one, or to the phone's internal storage. You can copy them to your computer or access them in the Photos app.

Capturing a Photo

1. Touch on the home screen.
2. Aim the camera at the subject and make any necessary adjustment. PHOTO (auto camera) mode is used by default.
3. Touch the area where you want the camera to focus, or leave the camera to autofocus on the center of the image.

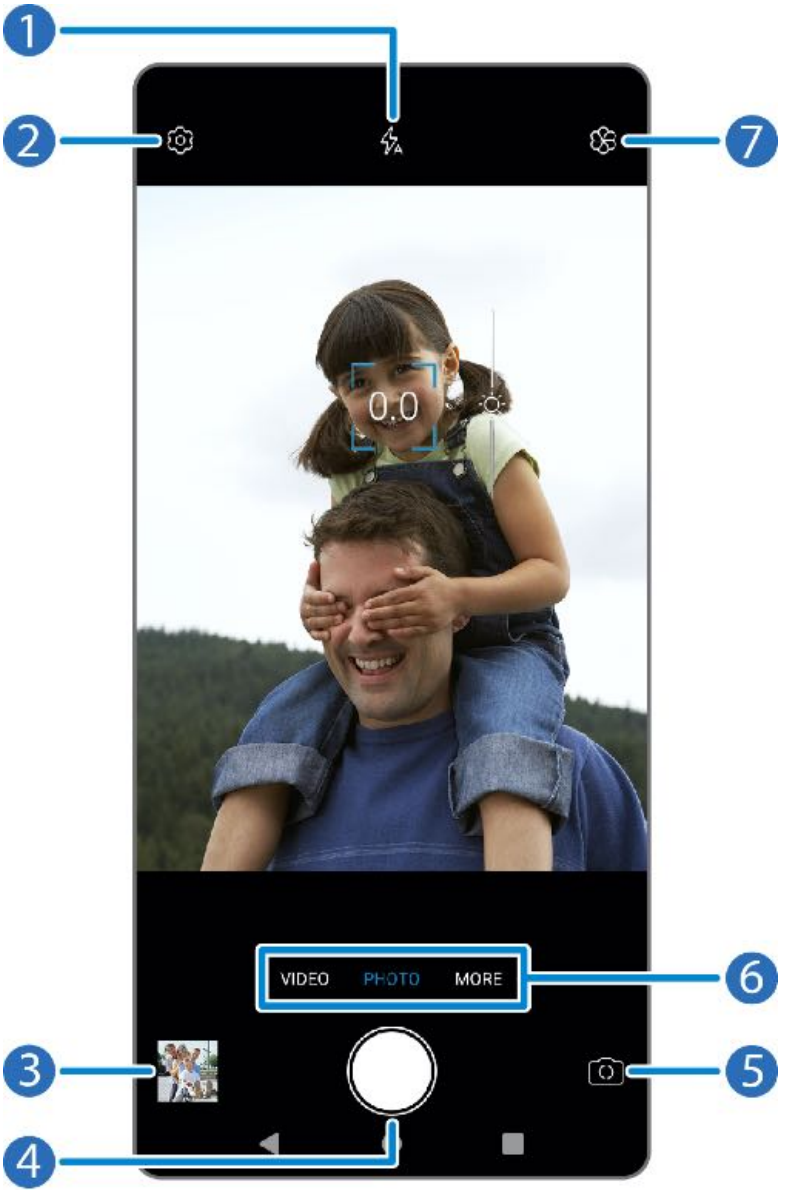

Number	Function
1	Change the flash setting (back camera only).
2	Change the camera settings.
3	View pictures and videos you have taken.
4	Capture a photo.

5	Switch between the front and back cameras.
6	Switch among the default PHOTO mode, VIDEO mode, and more.
7	Select a filter.

4. Lightly touch to take the picture.

WARNING!

Keep a safe distance when using the flash. Do not point the flash toward the eyes of people or animals.

NOTES:

- You can pinch or spread your fingers on the screen to zoom in or zoom out before taking a picture.
- In PHOTO (auto camera) mode, when you touch the screen to focus, the exposure bar appears beside the focus point. You can drag up or down to adjust the exposure.

Using Manual Camera Mode

You can use Manual camera mode to adjust more camera options for your photo.

1. From the home screen, touch > **MORE** > **MANUAL**.
2. Aim the camera at the subject. You can make the following adjustments.
   - Drag the yellow circle to any area on the screen where you want the camera to meter exposure so as to adjust the photo brightness. Touch and hold the circle to lock exposure.
   - Drag the blue square to any area on the screen that you want to focus on. Touch and hold it to lock or unlock the focus.
   - Touch the icons near the bottom of the preview area and drag the sliders to adjust ISO, exposure, white balance, and interval for taking consecutive shots.
3. Touch to take the photo.

Recording a Video

1. From the home screen, touch > **VIDEO**.
2. Aim the camera at the subject.
3. Touch to start recording. You can also touch or to pause or resume recording, or touch to save the frame as a photo.
4. Touch to stop recording.

NOTES:

- You can pinch or spread on the screen or press the **Volume** key to zoom in or zoom out before and during recording.
- When you touch the screen to focus during recording, the exposure bar appears beside the focal point. You can drag up or down to adjust the exposure. Touch and hold the focal point to lock/unlock the focus.
- To capture a time-lapse video, touch **MORE** > **TIMELAPSE** below the preview area. Adjust the time interval. Then touch to begin recording and to stop. You can also touch to save the frame as a photo.

Customizing Camera and Video Settings

Before capturing a photo or video, you can touch ⚙ to open the following options.

NOTE:

Some camera and video options will change in different camera modes.

Options in Photo Mode (Back Camera)

- **Resolution:** Set the resolution for your photo.
- **Timer:** Set a time delay before the camera takes a picture automatically after you touch the shutter icon.
- **Composition:** Show or hide the grid or golden spiral to help with balanced photo composition.
- **Gradienter:** Show or hide the gradienter.
- **Volume key:** Assign the function of the **Volume** key.

Options in Selfie Mode (Front Camera)

- **Resolution:** Set the resolution for your photo.
- **Timer:** Set a time delay before the camera takes a picture automatically after you touch the shutter icon.
- **Point-and-shoot:** When this feature is enabled, you can touch the viewfinder screen to take a photo.

- **Mirror image:** When enabled, allows you to capture a photo that is the same as the viewfinder preview.
- **Volume key:** Assign the function of the **Volume** key.

Options in Video Mode (Front or Back Camera) and Timelapse Mode

Video quality: Set the quality for your video.

Options in Manual Mode (Back Camera)

- **Resolution:** Set the resolution for your photo.
- **Timer:** Set a time delay before the camera takes a picture automatically after you touch the shutter icon.
- **Metering:** Adjust the light metering setting.
- **Composition:** Show or hide the grid or golden spiral to help with balanced photo composition.
- **Gradienter:** Show or hide the gradienter.
- **Volume key:** Assign the function of the **Volume** key.

Options in Panorama Mode (Back Camera)

- **Timer:** Set a time delay before the camera takes a picture automatically after you touch the shutter icon.
- **Volume key:** Assign the function of the **Volume** key.

General Options

- **Shutter tone:** Turn the shutter tone on or off.
- **Geo-tagging:** When enabled, store the location data in your captured photos and videos.
- **Anti-banding:** Set the anti-banding value when you take pictures or videos of TV or computer screens to avoid stripes on the screen.
- **Save location:** Change the storage location for captured photos and videos.
- **Help:** Enable the Help icon on the viewfinder screen, or touch **More** to view help details.
- **Restore defaults:** Restore default camera and video settings.

Music

Swipe up on the home screen and touch **Music** to play audio files stored on your phone. Music supports a wide variety of audio formats, so it can play music you purchase from online stores, music you copy from your CD collection, and more.

Viewing Your Music Library

Open Music and touch **All songs** to view all your audio files or by categorized lists of artists, albums, and genres. You can also touch **Favorites**, **Recently played**, or **Folders** to find songs, or view all your playlists in the Playlist section.

NOTE:

If an audio file is being played, its name and player controls are displayed at the bottom of the screen. Touch the area to open the playback screen.

Setting a Song as the Default Ringtone

You can use your music tracks as the default ringtone for incoming calls or notifications. The special ringtones you assigned to selected contacts and the notification sound of apps that have their own notification settings will not be affected.

1. Open Music and touch **All songs** to see your music library.

   NOTE:

   If you are in the playback screen, touch ⌄ at the top left of the screen to return to the music library.

2. Touch ⋮ next to a song in any list.
3. In the menu that opens, touch **Set as ringtone**.
4. Touch **Phone ringtone** or **Notification ringtone**.

NOTE:

If the song is being played and you're in the playback screen, you can touch ⋮ > **Set as ringtone** and select **Phone ringtone** or **Notification ringtone**.

Playing Music

Touch a song in the music library to listen to it. Touch the playback bar at the bottom of the screen to open the following playback screen.

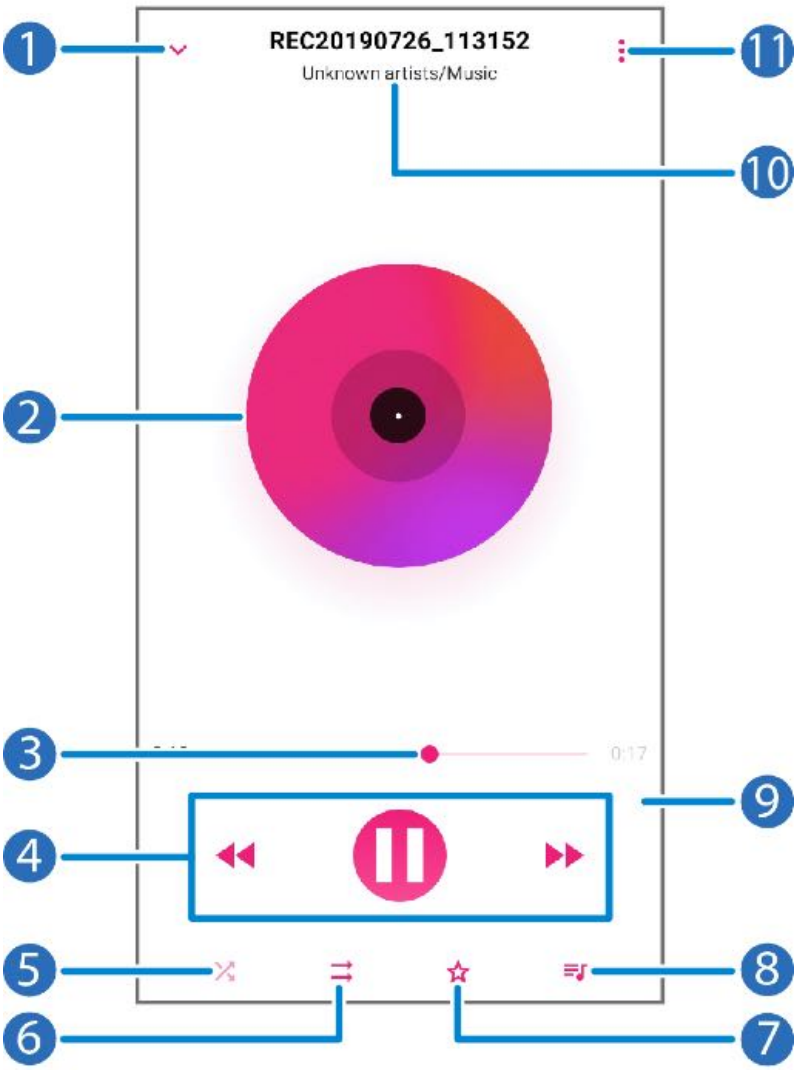

Number	Function
1	Touch to go back to the music library.
2	Album artwork (if available).
3	Drag the slider to jump to any part of the song.
4	Playback control. Skip songs or pause and resume playback.
5	Turn shuffle on or off.
6	Toggle repeat mode: repeat the current song, repeat the playlist, or turn off repeat.
7	Add the song to your favorites, or remove it from favorites.
8	Touch to see the current playlist.
9	Song, album, and artist information (if available).
10	Access additional options.

You can still control the music when you are not in the playback screen.

- In other apps, swipe down the notification panel. Touch the song title to restore the playback screen, or you can pause/resume playback or skip songs.
- When the screen is locked, the song information and playback controls are displayed on the lock screen as a notification. Double-tap the notification to restore the playback screen, or you can pause/resume playback or skip songs.

Managing Playlists

Create playlists to organize your music files into sets of songs, so that you can play the songs you like in the order you prefer.

- Touch ⋮ > **Add to** next to a song to add it to a playlist or create a new playlist.
- In the Playlist section of the music library, touch a playlist to view its content. You can then touch ⋮ at the top right to add more songs to the playlist, rename, or delete the playlist; touch ⋮ > **Remove** next to a song to remove it from the playlist.

Video Player

Use the Video app to manage your video library and to watch videos.

Opening the Video Library

Swipe up on the home screen and touch **Video** to view your video library. Swipe up or down to find the video you want. You can also touch ⋮ > **Search** to search for video files, or touch ▦ , ⋮ > **View** or **Sort** to change the display mode or sort the list.

Playing and Controlling Videos

Touch a video in the video library to play it. Touch the screen to show the playback controls. You can control the video and audio or carry out other operations.

- Touch ⏮ or ⏭ to skip to the previous or the next video.
- Touch ⏸ to pause.
- Touch ⛶ to fit the video to the full screen.
- Touch ⧉ to play the video in picture-in-picture mode, where the video plays in a window on top of other apps you're using.

  NOTE:

  Touch ⧉ to return to the normal playback screen from picture-in-picture mode.

- Touch to hide playback controls.
- Touch to change the playback speed.
- Touch to turn on/off DTS Sound.

NOTES:

- Slide horizontally on the video to rewind or fast forward.
- Slide vertically on the right or left part of the screen to adjust volume or brightness, respectively.

Managing Video Files

Delete or Share Videos

1. In the video library, touch and hold a video.
2. Touch other videos you want to delete or share, if necessary.
3. Touch > **OK** to delete or to share.

Trim a Video

1. Touch a video to start playing it.
2. Touch > **Trim**.
3. Drag the two tabs on the progress bar to select the portion you want to keep. You can touch to preview the selected portion.
4. Touch . The trimmed video is saved as a new video file.

NOTE:

Touch ⊗ to cancel trimming and return to video playing.

Rename a Video

1. Touch and hold the video you want to rename.
2. Touch ⋮ > **Rename**.
3. Type the new video name and touch **OK**.

View Details of a Video

1. Touch and hold the video for which you want to view details.
2. Touch ⋮ > **Details**.
3. Touch **OK** to close the window.

Voice Recorder

Voice Recorder enables you to record and listen to voice memos.

Recording a Voice Memo

1. Swipe up on the home screen and touch **Voice Recorder**.
2. Touch to select the audio format of the recording.
3. Touch to start recording. During recording, you can do the following:
   - Touch or to pause or continue the recording.
   - Touch or to add an empty tag or photo tag to the recording.
4. Touch **DONE** to stop recording.
5. Edit the file name and touch **SAVE** to save the recording.

If you don't want to save the memo after recording it, touch **DELETE** > **DELETE** to delete it.

Playing a Voice Memo

1. Touch at the top right of the screen to see all recordings.
2. Touch the title of a memo to play it. During the playing, you can touch or to add an empty tag or photo tag.

NOTE:

Touch **View tag** to check all time tags. You can touch "+" after an empty tag to add an image or text, touch an image to delete it or replace it with another image, or touch and hold a tag to delete it.

Trimming a Voice Memo

1. While playing a recording, touch **EDIT** to open the editing screen.
2. Drag S or E to trim the recording. You can touch ▶ to preview the trimmed recording.
3. Touch **TRIM**.
4. Edit the new file name and touch **SAVE**.

More Apps

Calculator

Swipe up on the home screen and touch **Calculator** to use the built-in calculator for some basic as well as advanced mathematical equations.

NOTE:

To see more calculator options, swipe left while holding the phone in portrait view or turn the phone to landscape view.

Clock

Swipe up on the home screen and touch **Clock**. The Clock app allows you to check local time in places around the world, set alarms, and use timers and nightstand clock.

Set a New Alarm

1. Open the Clock app and touch the tab.
2. Touch a default alarm to configure it, or touch at the bottom of the screen to create a new alarm.
3. Set up the alarm options, such as time, repeat, alarm ringtone, and label.

NOTES:

- To enable or disable existing alarms directly, touch the switches on the right side of each alarm.
- To change the default alarm ringtone, swipe up on the home screen and touch **Settings** > **Sound** > **Advanced** > **Default alarm sound**.

Use World Time

1. Open the Clock app and touch the tab.
2. World time lets you check local times for cities around the world. Touch to add a new city.

NOTE:

Touch and hold on any of the clocks or any empty area to enable the screen saver, where your local time is displayed silently on a dark background. You can then dock the phone and use it as a nightstand clock.

Using Stopwatch and Countdown

1. Open the Clock app and touch or .
2. Stopwatch allows you to record lap times, while countdown allows you to set a time and count down to zero.

Configure the Clock App Settings

Open the clock app and touch > **Settings** to access options for clocks, alarms, and timers.

Downloads

The Downloads app keeps a record of the files you have downloaded using apps such as Chrome or Email.

Swipe up on the home screen and touch **Downloads**.

- Touch a file to open it with the appropriate application.
- Touch and hold a file to delete or share it.
- Touch on the top right to sort the downloaded files by date, name, or size.

File Manager

Quickly access all of your images, videos, audio clips, and other types of files on your phone and on the memory card.

Swipe up on the home screen and touch **File Manager**. Touch **CATEGORY** to find the file you need by category, or touch **LOCAL** to browse folders and files on the phone storage or the microSDXC card.

- Touch folders and files to access stored items.
- Touch and hold an item or touch > **Multi-Select** to access options such as copy, move, compress, share, rename, delete, add to Favorites, or add as a shortcut to the home screen.
- To copy or move an item, touch and hold the item, touch > **Move** or **Copy**, navigate to a new location, and touch **PASTE**.
- Touch to create a new folder in the current directory.

- Touch to search for a file or folder by name.
- Touch > **Sort by** to change the order of the items in the list.
- Touch in the root directory and switch on **Show local hidden files** to display hidden system files and folders.

Google Apps

NOTE:

Google services may not be available in certain region.

- **Calendar:** Keep track of life's important events with Google Calendar synced across your devices.
- **Chrome:** Use the Chrome app to browse the Internet and get your bookmarks, browsing history, and more synced with your Google account.
- **Drive:** Store files on Google servers for free after you sign in to your Google account. You can access them on your computers, your phones, and other devices, share them, or collaborate with others.
- **Duo:** Video chat one-on-one using Wi-Fi or mobile data.
- **Find Device:** Easily locate a lost Android device and keep your information safe and sound.
- **Gmail:** Send and receive emails via your Gmail account or other personal email accounts.

- **Google:** Use Google search or get information when you need it with Google Assistant.
- **Google Pay:** Use the online payment system for in-app and tap-to-pay purchases on your phone.
- **Keep Notes:** Capture notes, share them with others, and access them from your computer, phone or tablet. Free with a Google account.
- **Maps:** Find your place and find your way in the world.
- **News:** Comprehensive up-to-date news coverage, aggregated from sources all over the world by Google News.
- **Photos:** Manage photos on the phone and your Google account.
- **Play Movies & TV:** Purchase, download and watch movies and TV shows.
- **Play Music:** Play music on the phone and your Google account.
- **Play Store:** Buy and download apps, games, and more from the Google Play store.
- **YouTube:** Watch video clips from YouTube.com, or upload your own and share with the world.

Settings

Swipe up on the home screen and touch **Settings**. Settings contains most of the tools for customizing and configuring your phone. In some menus, you may need to touch **Advanced** to see all the options.

Network & Internet

Wi-Fi

Turn Wi-Fi on or off and configure your Wi-Fi connections (see *Connecting to Wi-Fi*).

Mobile Network

Control mobile data use, select network operators, and configure access point names (see *Connecting to Mobile Networks*).

Data Usage

Check and manage mobile data use. You can view Wi-Fi data usage as well.

- **Data Saver:** Enable Data saver which prevents apps from using data connection in the background. For an app you're currently using, it can access data, but may do so less frequently when Data saver is enabled. You can also touch **Unrestricted data** and allow some apps to always have access to data connection

even when Data saver is turned on.

- **Display in GB/MB:** Change the data unit displayed.
- **Mobile data:** Switch to turn on or off mobile data.
- **App data usage:** Check how much data has been used during the time cycle you set, see what apps have been using mobile data, restrict background data for individual apps, or allow unrestricted data usage when Data saver is on for individual apps.
- **Data warning & limit:** Set the data usage cycle, data warning, data limit, and alert.
- **Wi-Fi data usage:** View the Wi-Fi usage of apps.

NOTE:

The data usage is measured by your phone, and your carrier's data usage accounting may differ.

Hotspot & Tethering

Share your phone's mobile data connection with PCs or other devices. See *Sharing Mobile Data Through Tethering*.

Airplane Mode

Turn airplane mode on or off. All the phone's radios that transmit voice or data are turned off when airplane mode is on.

Call Settings

Configure call options that you can also access from the Phone app by touching ⋮ (next to **Search contacts**) > **Settings** > **Call settings**.

VPN

Set up and connect to virtual private networks. Virtual private networks (VPNs) allow you to connect to the resources inside a secured local network. VPNs are commonly deployed by corporations, schools, and other institutions to let people access local network resources when not on campus, or when connected to a wireless network. Depending on the type of VPN you are using, you may be required to enter your login credentials or install security certificates before you can connect to your VPN. You can get this information from your network administrator.

NOTE:

You need to set a lock screen pattern, PIN, or password before you can use a VPN.

Private DNS

To get information from a website, your phone first asks where the website is. Private DNS is a way to help secure these questions and answers.

By default, your phone uses Private DNS with all networks that can use Private DNS. We recommend keeping Private DNS turned on.

Wireless Emergency Alerts

Manage options for receiving emergency alert messages.

Connected Devices

Touch **Connection preferences > Bluetooth**. You can turn Bluetooth on or off and configure your Bluetooth connections. See *Connecting to Bluetooth Devices*.

In the Connection preferences menu, you can also touch **Printing** to use the default printing service or other printer plug-ins installed from the Google Play Store or your printer manufacturer for wireless printing, or touch **Chromebook** to connect with your Chromebook device.

Apps & Notifications

App Info

Touch an app to see its information and configure the available options.

Screen Time

Touch **Screen time** to find out how much time you spend on the phone and set daily time limits for most apps. When you reach the time limits, apps are closed and their icons dim for the rest of the day so that you can disconnect from the digital world.

Notifications

Touch **Notifications** to manage app notifications.

Default Apps

Touch **Default apps** to select the default app for voice assistant and input, web browsing, messaging, etc. Touch **Opening links** to set Instant apps options, or touch an installed app to check its supported links and set whether to open the links in the app and clear the app's defaults.

App Permissions

Touch **App permissions** to check what apps have been allowed to access certain permissions. You can also change the app permissions.

WARNING!

Changing the app permissions may result in the app not working correctly or as originally intended.

Special App Access

Touch **Special app access** to set special access and rights of apps.

Features

The following features are available.

- **Navigation keys:** Change the navigation bar style for the phone.
- **Record screen:** Set the video quality and the touch interaction options for screen recording.

  NOTE:

  To record the screen and save it as a video, swipe down the status bar with two fingers and touch **Record screen** in the Quick Settings panel. Then touch ● to start recording, ❚❚ to pause, and ■ to stop.
- **Scheduled power On/Off:** Set the day and time when the phone automatically powers on or off. Touch the switches on the right to turn the features on or off.
- **Gesture & motion:** You can control the phone with special finger gestures or by moving the phone in different ways. Touch the switches to enable each function; touch each function to view how to use it or try it out.

Battery

View the battery level, check what has been using the battery, enable different battery saving modes, or manually optimize apps to improve battery life.

Display

Configure the display options, including brightness level, Night Light mode, wallpaper, screen sleep time, screen rotation, font size, and more.

Sound

Adjust different types of volume (see *Adjusting Volumes*), set notification mode (see *Switching to Silent or Vibration Mode*), set Do not disturb options (see *Using Do Not Disturb Mode*), set up ringtones and notification sounds (see *Changing the Ringtone, Notification Sound, and Alarm Sound*), or select system sounds (see *Turning System Sounds On/Off*) or DTS Sound effect.

Storage

The Storage settings menu lets you check memory information for your microSDXC card and phone storage.

You can choose the default location for new data, such as recorded voice memos. Touch **Saving location** and select to store items in the phone storage or the installed microSDXC card.

Under Device storage, touch **Internal shared storage** to get a detailed breakdown of space usage by type. Touch **FREE UP SPACE** to delete the files you do not need.

Under Portable storage, safely mount, unmount (remove), and format your microSDXC card. For more information about using the device storage and the microSDXC card, see *Using the microSDXC Card as Portable or Device Storage*.

Security & Location

The Security & location menu allows you to configure the following options.

- **Google Play Protect:** Check your apps and device for harmful behavior.
- **Find My Device:** Link your phone to your Google account so you can locate the device remotely and keep your data safe when the phone is lost.
- **Security update:** Check and download system updates.
- **Screen lock:** Set up a screen lock after which you must swipe on the phone, draw a pattern, or enter a PIN/password to access the phone (see *Protecting Your Phone With Screen Locks*).

  Touch ⚙ beside **Screen lock** to set the following options.

  - ▶ **Make pattern visible:** Show the pattern as you draw it. This option is available when unlock pattern is set.
  - ▶ **Automatically lock:** Set the time needed for the lock protection to be activated after the screen turns off. This option is available when unlock pattern, PIN or password is set.

- **Power button instantly locks:** Lock protection is activated immediately when you press the **Power** key. This option is available when unlock pattern, PIN or password is set.
- **Lock screen message:** Set the text that you may display on the lock screen.

- **Lock screen preferences:** Set notification display preference, message, lockdown, and other options for the lock screen.
- **Fingerprint:** Enable the touch-control and swipe functions of the fingerprint sensor. Register up to 5 fingerprints for unlocking the phone or opening bound apps. See *Using Your Fingerprint*.
- **Smart Lock:** Keep the phone unlocked when connected to trusted devices, in trusted places, or while being held or carried.

  NOTE:

  You need to sign in to your Google account on the phone to use all the Smart Lock features.
- **Location:** Manage location services, which help your phone and apps determine your location. To use location-related applications, such as finding your location on Google Maps, you must have location services enabled on your phone.
- **Show passwords:** Display characters in a password briefly as you enter them.
- **Device admin apps:** Activate or deactivate apps to be device administrators.

- **SIM card lock:**
  - ▶ **Lock SIM card:** Activate or deactivate the PIN lock to require PIN before accessing the nano-SIM card.
  - ▶ **Change SIM PIN:** Change the PIN used to access the nano-SIM card.

  NOTE:

  Put all your confidential passwords in a safe place for future use. If you enter the wrong SIM PIN more times than allowed, your nano-SIM card will be locked and you cannot access the mobile network. Contact your operator for a PIN Unlock Key (PUK) to restore the nano-SIM card.
- **Encryption & credentials:** Check the encryption status of your phone and set the credential storage options.
- **Trust agents:** Activate or deactivate trust agents.
- **Screen pinning:** Keep a screen of your choice in view so that others cannot switch to other apps and access personal information (see *Protecting Your Phone With Screen Pinning*).

Accounts

The **Accounts** menu lists the accounts you have signed in on the phone for you to manage them. You can also touch **Add account** to sign in to or create other accounts or turn on/off auto sync.

Accessibility

The **Accessibility** menu allows you to configure the system accessibility options and accessibility plug-ins on your phone, such as using **Color inversion** or **Font size** for users with sight problems.

Digital Wellbeing

The **Digital Wellbeing** menu gives you information on how you spend time on your phone and apps. You can use that information to avoid digital indulgence and improve your wellbeing.

- **Dashboard:** Check the screen time, numbers of notifications, and opened times of each app. You can set daily timers for the most-used apps to prevent overindulgence. See *Screen Time*.
- **Wind Down:** Schedule Grayscale and Do Not Disturb mode to help you get ready for sleep.
- **Reduce interruptions:** Manage app notification and Do Not Disturb settings to reduce interruption from your important tasks.
- **Show icon in the app list:** Display or hide the Digital Wellbeing app in the app list.

Google

The **Google** menu lets you manage settings for Google apps and services that are installed on your device.

System

Languages & Input

Configure options related to system language, input methods and assistance, speech input and output as well as mouse/trackpad input.

Date & Time

Set date, time, time zone, and how time is displayed. You can also use network-provided data (see *Setting the Date and Time*).

Backup

Manage data backup options. To easily restore or switch devices at any time, you can enable automatic backup to Google Drive of important data. You need to sign in to your Google account to use this feature.

Reset Options

Reset network settings, app preferences, system settings, or the phone to factory default status.

Multiple Users

Manage the user accounts of your phone.

You can share your phone with other people by creating additional users. Each user has his/her own storage space, wallpaper, screen

lock and so on. Users can also adjust phone settings like Wi-Fi that affect everyone and update apps for all other users.

By default, a Guest account is available for anyone who needs to use your phone temporarily. You can touch **Add user** to create more user accounts.

If you want users to add more users when the phone is locked, switch on **Add users from lock screen**. Anyone can then open the Quick Settings panel from the lock screen and touch > **Add user** to create new users or profiles.

NOTE:

When a guest user has finished using your phone, he/she can touch **Remove guest** in the **Multiple users** menu to delete all his/her data from your phone.

About Phone

View SIM status, legal information, regulatory ID, and other information.

System Updates

Check for system updates and install them when they become available, show update history, or use Software Upgrade Assistant installed on your computer to install updates to the phone via a USB cable (see *Connecting to Your Computer via USB*).

Upgrading the Phone Software

There are several ways to upgrade your phone software.

1. Use the online upgrade tool for mobile terminal products.
2. Use the one-press upgrade package offered by your mobile service provider.
3. Use your PC to download and upgrade package to your microSDXC card and install it to your phone from the card.

NOTE:

Visit the ZTE official handset service support website **Z-Community** (https://community.zteusa.com) to learn more about the above upgrade methods, as well as which phones and methods are supported.

Troubleshooting

If you encounter problems while using the phone, or if it performs abnormally, you can refer to the chart below. If your particular problem cannot be resolved using the information in the chart, contact the dealer where you purchased the phone.

Problem	Possible Causes	Possible Solution
Poor reception	The network signal is too weak at your current location (for example, in a basement or near a tall building) because wireless transmissions cannot effectively reach it.	Move to a location where the network signal can be properly received.
	The network is busy at the current time (for example, during peak times, there may be too much network traffic to handle additional calls).	Avoid using the phone at such times, or try again after waiting a short time.
	You are too far away from a base station for your service provider.	You can request a service area map from your service provider.

Problem	Possible Causes	Possible Solution
Echo or noise	Poor network link quality on the part of your service provider.	End the call and dial again. You may be switched to a better-quality network link or phone line.
	Poor local telephone line quality.	End the call and dial again. You may be switched to a better-quality network link or phone line.
Unable to select certain features	Your service provider does not support these features, or you have not applied for services that provide these features.	Contact your service provider.
Cannot charge the battery	The battery or battery charger is damaged.	Contact the dealer.
	The phone's temperature is below 32°F (0°C) or higher than 95°F (35°C).	Adjust the battery charging environment to avoid extremes of temperature.
	Poor contact between the battery and charger.	Check all connectors to ensure that all connections have been properly made.

Problem	Possible Causes	Possible Solution
Shortened standby time	The standby time is related to your service provider system configuration. The same phone used with different service providers' systems will not provide exactly the same length of standby time.	If you are located in an area where signaling is weak, temporarily power off the phone.
	The battery is depleted. In high temperature environments, battery life will be shortened.	Contact the dealer to change a new battery.
	If you are not able to connect to the network, the phone will continue to send out signals as it attempts to locate a base station. Doing so consumes battery power and will consequently shorten standby time.	Change your location to one where the network is accessible, or temporarily turn off your phone.
Cannot turn your phone on	Battery power has been depleted.	Recharge the phone's battery.

Problem	Possible Causes	Possible Solution
nano-SIM card error	The nano-SIM card has malfunctioned or is damaged.	Take the nano-SIM card to your service provider for testing.
	The nano-SIM card is inserted improperly.	Insert the nano-SIM card properly.
	Debris is on the nano-SIM card contacts.	Use a soft, dry cloth to clean the nano-SIM card contacts.
Unable to connect to the network	The nano-SIM card is invalid.	Contact your service provider.
	You are not within the network's service area.	Check the service area with your service provider.
	Poor signal.	Move to an open space, or if you are inside a building, move closer to a window.
Cannot answer incoming calls	You have activated the Call blocking feature.	Disable this feature. Open the Phone app and touch ⋮ > **Settings** > **Blocked numbers**. Touch ✕ > **UNBLOCK** next to the number you want to unblock.

Problem	Possible Causes	Possible Solution
PIN Code blocked	You have entered an incorrect PIN code three consecutive times.	Contact your service provider. If the service provider provides the nano-SIM card's PUK code, use the PUK code to unlock the nano-SIM card.
Phone crashes, reboots, freeze, or cannot be powered on	Some third-party software is not compatible with your phone.	Uninstall the software that may cause the problem.
		Upgrade the phone software.
		Reset the phone to factory status.

For Your Safety

General Safety

	Don’t make or receive phone calls while driving. Never text while driving.
	Keep your phone at least 10 mm away from your body while making calls.
	Small parts may cause choking.
	Your phone can produce a loud sound.
	To prevent possible hearing damage, do not listen at high volume levels for long periods. Exercise caution when holding your phone near your ear while the loudspeaker is in use.
	Avoid contact with anything magnetic.
	Keep away from pacemakers and other electronic medical devices.
	Turn off when asked to in hospitals and medical facilities.
	Turn off when told to on aircraft and at airports.

	Turn off when near explosive materials or liquids.
	Don’t use at gas stations.
	Your phone may produce a bright or flashing light.
	Don’t dispose of your phone in fire.
	Avoid extreme temperatures.
	Avoid contact with liquids. Keep your phone dry.
	Do not attempt to disassemble your phone.
	Only use approved accessories.
	Don’t rely on your phone as a primary device for emergency communications.

Radio Frequency (RF) Energy

This phone is designed and manufactured not to exceed the emission limits for exposure to radio frequency (RF) energy set by the Federal Communications Commission of the United States.

During SAR testing, this device was set to transmit at its highest certified power level in all tested frequency bands, and placed in positions that simulate RF exposure in usage against the head with no separation, and near the body with the separation of 0.4 inches (10 mm). Although the SAR is determined at the highest certified power level, the actual SAR level of the device while operating can be well below the maximum value. This is because the phone is designed to operate at multiple power levels so as to use only the power required to reach the network. In general, the closer you are to a wireless base station antenna, the lower the power output.

The exposure standard for wireless devices employing a unit of measurement is known as the Specific Absorption Rate, or SAR. The SAR limit set by the FCC is 1.6 W/kg.

This device is complied with SAR for general population/uncontrolled exposure limits in ANSI/IEEE C95.1-1992 and had been tested in accordance with the measurement methods and procedures specified in IEEE1528.

The FCC has granted an Equipment Authorization for this model phone with all reported SAR levels evaluated as in compliance with the FCC RF exposure guidelines. SAR information on this model phone is on file with the FCC and can be found under the Display Grant section of **www.fcc.gov/oet/ea/fccid** after searching on **FCC ID: SRQ-Z6201V**.

For this device, the highest reported SAR value for usage against the head is **1.04 W/kg**, and for usage near the body is **1.18 W/kg**.

While there may be differences between the SAR levels of various phones and at various positions, they all meet the government requirements.

SAR compliance for body-worn operation is based on a separation distance of 0.4 inches (10 mm) between the unit and the human body. Carry this device at least 0.4 inches (10 mm) away from your body to ensure RF exposure level compliant or lower to the reported level. To support body-worn operation, choose the belt clips or holsters, which do not contain metallic components, to maintain a separation of 0.4 inches (10 mm) between this device and your body.

RF exposure compliance with any body-worn accessory that contains metal was not tested and certified, and use of such body-worn accessory should be avoided.

FCC Regulations

This device complies with part 15 of the FCC Rules. Operation is subject to the following two conditions: (1) This device may not cause harmful interference, and (2) this device must accept any interference received, including interference that may cause undesired operation.

This equipment has been tested and found to comply with the limits for a Class B digital device, pursuant to part 15 of the FCC Rules. These limits are designed to provide reasonable protection against harmful interference in a residential installation. This

equipment generates, uses and can radiate radio frequency energy and, if not installed and used in accordance with the instructions, may cause harmful interference to radio communications. However, there is no guarantee that interference will not occur in a particular installation. If this equipment does cause harmful interference to radio or television reception, which can be determined by turning the equipment off and on, the user is encouraged to try to correct the interference by one or more of the following measures:

- Reorient or relocate the receiving antenna.
- Increase the separation between the equipment and receiver.
- Connect the equipment into an outlet on a circuit different from that to which the receiver is connected.
- Consult the dealer or an experienced radio/TV technician for help.

CAUTION:

Changes or modifications not expressly approved by the manufacturer could void the user's authority to operate the equipment.

The antenna(s) used for this transmitter must not be co-located or operating in conjunction with any other antenna or transmitter.

Hearing Aid Compatibility (HAC) Regulations for Mobile Phones

In 2003, the FCC adopted rules to make digital wireless telephones compatible with hearing aids and cochlear implants. Although analog wireless phones do not usually cause interference with hearing aids or cochlear implants, digital wireless phones sometimes do because of electromagnetic energy emitted by the phone's antenna, backlight, or other components. Your phone is compliant with FCC HAC regulations (ANSI C63.19- 2011).

While some wireless phones are used near some hearing devices (hearing aids and cochlear implants), users may detect a buzzing, humming, or whining noise. Some hearing devices are more immune than others to this interference noise and phones also vary in the amount of interference they generate. The wireless telephone industry has developed a rating system for wireless phones to assist hearing device users in finding phones that may be compatible with their hearing devices. Not all phones have been rated. Phones that are rated have the rating on their box or a label located on the box. These ratings are not guaranteed. Results will vary, depending on the level of immunity of your hearing device and the degree of your hearing loss. If your hearing device happens to be vulnerable to interference, you may not be able to use a rated phone successfully. Trying out the phone with your hearing device is the best way to evaluate it for your personal needs.

This phone has been tested and rated for use with hearing aids for some of the wireless technologies that it uses. However, there may

be some newer wireless technologies used in this phone that have not been tested yet for use with hearing aids. It is important to try the different features of this phone thoroughly and in different locations, using your hearing aid or cochlear implant, to determine if you hear any interfering noise. Consult your service provider or the manufacturer of this phone for information on hearing aid compatibility. If you have questions about return or exchange policies, consult your service provider or phone retailer.

M-Ratings: Phones rated M3 or M4 meet FCC requirements and are likely to generate less interference to hearing devices than phones that are not labeled. M4 is the better/higher of the two ratings.

T-Ratings: Phones rated T3 or T4 meet FCC requirements and are likely to be more usable with a hearing device's telecoil ("T Switch" or "Telephone Switch") than unrated phones. T4 is the better/higher of the two ratings. (Note that not all hearing devices contain telecoils.)

Your phone has been tested for hearing aid device compatibility and has an **M4/T3** rating.

Hearing devices may also be measured for immunity to this type of interference. Your hearing device manufacturer or hearing health professional may help you find results for your hearing device.

For additional information about the FCC's actions with regard to hearing aid compatible wireless devices and other steps the FCC has taken to ensure that individuals with disabilities have access to telecommunications services, please go to www.fcc.gov/cgb/dro.

CTIA Requirements

- Do not disassemble or open, crush, bend or deform, puncture or shred the battery.
- Do not modify or remanufacture, attempt to insert foreign objects into the battery, immerse or expose to water or other liquids, expose to fire, explosion or other hazards.
- Only use the battery for the device for which it is specified.
- Only use the battery with a charging system that has been qualified with the system per CTIA Certification Requirements for Battery System Compliance to IEEE 1725. Use of an unqualified battery or charger may present a risk of fire, explosion, leakage, or other hazards.
- Do not short-circuit the phone or allow metallic conductive objects to contact the charging terminals.
- Replace the battery only with another battery that has been qualified with the system per this standard, IEEE-Std-1725. Use of an unqualified battery may present a risk of fire, explosion, leakage or other hazards. Only authorized service providers shall replace the battery. (If the battery is non-user replaceable).
- Promptly dispose of used batteries in accordance with local regulations.
- Battery usage by children should be supervised.
- Avoid dropping the phone or battery. If the phone or battery is dropped, especially on a hard surface, and the user suspects damage, take it to a service center for inspection.

- Improper battery use may result in a fire, explosion or other hazards.
- The phone shall only be connected to CTIA certified adapters, products that bear the USB-IF logo or products that have completed the USB-IF compliance program.

Distractions

Driving

Full attention must be given to driving at all times in order to reduce the risk of an accident. Using a phone while driving (even with a hands-free kit) can cause distraction and lead to an accident. You must comply with local laws and regulations restricting the use of wireless devices while driving.

Operating Machinery

Full attention must be given to operating the machinery in order to reduce the risk of an accident.

Product Handling

General Statement on Handling and Use

You alone are responsible for how you use your phone and any consequences of its use.

You must always switch off your phone wherever the use of a phone is prohibited. Use of your phone is subject to safety measures designed to protect users and their environment.

- Always treat your phone and its accessories with care and keep them in a clean place.
- Keep the screen and camera lens clean. An unclean screen or camera lens may slow down the phone's reaction to your operations or interfere with the image quality.
- Clean your phone and its accessories with a soft material such as cleaning cloth for eyeglass lenses. Do not use alcohol or other corrosive substances for cleaning or allow them to get inside.
- Do not expose your phone or its accessories to open flames or lit tobacco products.
- Do not expose your phone or its accessories to liquid, moisture or high humidity.
- Do not drop, throw or try to bend your phone or its accessories.
- Do not use harsh chemicals, cleaning solvents, or aerosols to clean the device or its accessories.
- Do not paint your phone or its accessories.
- Do not attempt to disassemble your phone or its accessories. Only authorized personnel can do so.
- Do not place your phone inside or near heating equipment or high-pressure containers, such as water heaters, microwave ovens, or hot cooking utensils. Otherwise, your phone may be damaged.

- Please check local regulations for disposal of electronic products.
- Do not carry your phone in your back pocket as it could break when you sit down.

Battery Safety

- Using ZTE-unapproved or incompatible battery, charger or power adapter may damage your device, shorten its lifespan or cause a fire, explosion or other hazards.
- The recommended operating temperatures are 0 °C to 35 °C and the storage temperatures are -20 °C to +45 °C. Extreme temperatures can damage the device and reduce the charging capacity and lifespan of your device and battery.
- Do not remove the back cover. The battery is not removable. Removal may cause fire or explosion.
- Do not change or replace the built-in rechargeable battery in your device by yourself. The battery can only be changed or replaced by ZTE or ZTE-authorized service provider.
- Do not place the device or the battery in or near heating equipment, such as microwave ovens, stoves or radiators. Keep the device and the battery away from excessive heat and direct sunlight. If not, the device or the battery may overheat and cause explosion or fire.
- Do not disassemble, squeeze or puncture the device, as this can cause explosion or fire.
- Do not throw the device into a fire to avoid explosion.

- Please disconnect the charger when the battery is fully charged. Overcharging may shorten the battery life.
- When not using the device for a long period, please charge the battery about half and then store the device in a cool dry place.
- If the battery damages or shows signs of swelling or leakage, please stop use immediately and contact ZTE or an ZTE-authorized service provider for replacement.

Small Children

Do not leave your phone and its accessories within the reach of small children or allow them to play with it. They could hurt themselves or others, or could accidentally damage the phone. Your phone contains small parts with sharp edges that may cause an injury or may become detached and create a choking hazard.

Demagnetization

To avoid the risk of demagnetization, do not allow electronic devices or magnetic media close to your phone for a long time.

Electrostatic Discharge (ESD)

Do not touch the metal connectors on the nano-SIM card and the microSDXC card.

Antenna

Do not touch the antenna unnecessarily.

Normal Use Position

When placing or receiving a phone call, hold your phone to your ear, with the bottom towards your mouth.

Airbags

Do not place a phone in the area over an airbag or in the airbag deployment area, as an airbag inflates with great force and serious injury could result. Store the phone in a safe and secure area before driving your vehicle.

Seizures/Blackouts

The phone can produce a bright or flashing light. A small percentage of people may be susceptible to blackouts or seizures (even if they have never had one before) when exposed to flashing lights or light patterns such as when playing games or watching video. If you have experienced seizures or blackouts or have a family history of such occurrences, please consult a physician. To reduce the risk of blackouts or seizures, use your phone in a well-lit room and take frequent breaks.

Repetitive Strain Injuries

To minimize the risk of Repetitive Strain Injury (RSI) when texting or playing games with your phone:

- Do not grip the phone too tightly.
- Press the buttons lightly.
- Use the special features which are designed to minimize the times of pressing buttons, such as Message Templates and Predictive Text.
- Take frequent breaks to stretch and relax.

Emergency Calls

This phone, like any other wireless phone, operates using radio signals, which cannot guarantee connection in all conditions. Therefore, you must never rely solely on any wireless phone for emergency communications.

Loud Noise

This phone is capable of producing loud noises, which may damage your hearing. Turn down the volume before using headphones, *Bluetooth* headsets or other audio devices.

Phone Heating

Your phone may become warm during charging and during normal use.

Electrical Safety

Accessories

Use only approved accessories. Do not connect with incompatible products or accessories. Take care not to touch or allow metal objects, such as coins or key rings, to contact or short-circuit the charging port. Never puncture the surface of the phone with sharp objects.

Connection to Vehicles

Seek professional advice when connecting a phone interface to the vehicle electrical system.

Faulty and Damaged Products

Do not attempt to disassemble the phone or its accessories. Only qualified personnel can service or repair the phone or its accessories. If your phone (or its accessories) has been submerged in water, punctured, or subjected to a severe fall, do not use it until you have taken it to be checked at an authorized service center.

Radio Frequency Interference

General Statement on Interference

Care must be taken when using your phone in close proximity to personal medical devices, such as pacemakers and hearing aids. Please consult your doctor and the device manufacturers to determine if the operation of your phone may interfere with the operation of your medical devices.

Pacemakers

Pacemaker manufacturers recommend that a minimum separation of 6 inches (15 cm) be maintained between a mobile phone and a pacemaker to avoid potential interference with the pacemaker. To achieve this, use the phone on the opposite ear to your pacemaker and do not carry it in a breast pocket.

Hearing Aids

People with hearing aids or other cochlear implants may experience interfering noises when using wireless devices or when one is nearby. The level of interference will depend on the type of hearing device and the distance from the interference source. Increasing the separation between them may reduce the interference. You may also consult your hearing aid manufacturer to discuss alternatives.

Medical Equipment

Turn off your wireless device when you are requested to do so in hospitals, clinics or healthcare facilities. These requests are designed to prevent possible interference with sensitive medical equipment.

Aircraft

Turn off your wireless device whenever you are instructed to do so by airport or airline staff. Consult the airline staff about the use of wireless devices onboard the aircraft and enable airplane mode of your phone when boarding an aircraft.

Interference in Vehicles

Please note that because of possible interference with electronic equipment, some vehicle manufacturers forbid the use of mobile phones in their vehicles unless a hands-free kit with an external antenna is included in the installation.

Explosive Environments

Gas Stations and Explosive Atmospheres

In locations with potentially explosive atmospheres, obey all posted signs to turn off wireless devices such as your phone or other radio equipment. Areas with potentially explosive atmospheres include fueling areas, below decks on boats, fuel or chemical transfer or storage facilities, and areas where the air

contains chemicals or particles, such as grain, dust, or metal powders.

Blasting Caps and Areas

Power off your mobile phone or wireless device when in a blasting area or in areas where signs are posted to power off "two-way radios" or "electronic devices" to avoid interfering with blasting operations.